Note that all unique customer requirements (i.e tolerance) need to be verified thru Alfa Laval.

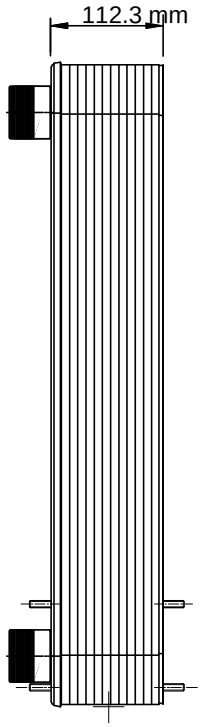

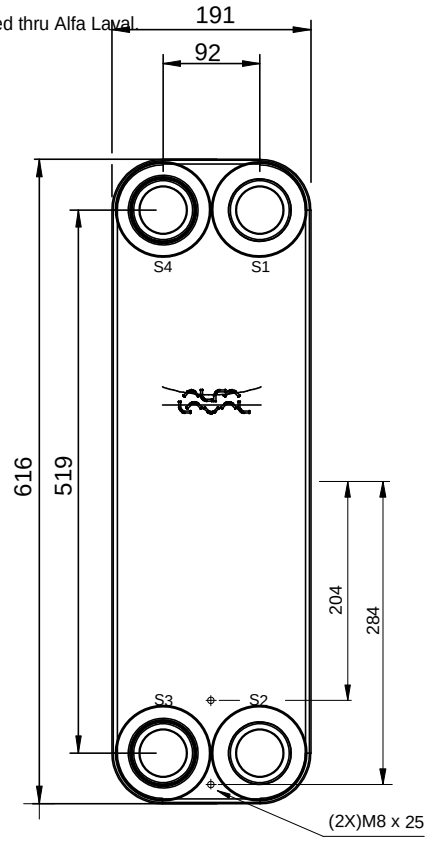

T1 T2 T3 T4 locations on back side
correspond to S1 S2 S3 S4 on front side

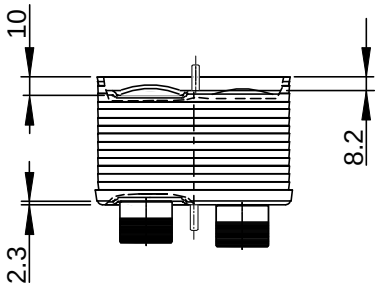

ALL DIMENSIONS IN MILLIMETERS

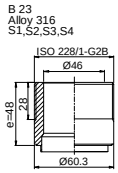

HEATING SURFACE	4.032 m²	PLATE MATERIAL	Alloy 316	TOTAL LENGTH	160.3
NETWEIGHT	21.40 kg	PLATE THICKNESS	0.3 mm	TOTAL WIDTH	191.0
OPERATING WEIGHT	28.91 kg	PLATE GROUPING	1*18ML / 1*19MH	TOTAL HEIGHT	616.0

MEDIA	INLET	TEMP.	OUTLET	TEMP.	FLOW RATE	PRESSURE DROP	LIQUID VOL.
Water	S4	130.0 °C	S3	70.0 °C	5.3 m³/h	3.044 kPa	3.780
Water	S2	65.0 °C	S1	85.0 °C	15.4 m³/h	22.80 kPa	3.990

SUPPLIER	REF.	MP NO.
AGENT/REF.		
CUSTOMER NAME / REF. NO.		
SIGN.		

PLATE HEAT EXCHANGER

CB110-38M

PED

ITEM ID.
32871 0159 1

DATE 2013-08-07

REV No. 0