Self-operated Regulators

Differential Pressure Regulators with Flow Limitation
Type 42-34 · Type 42-38

Type 42-34

Type 42-38

Mounting and Operating Instructions

EB 3013 EN

Edition July 2009

Contents Page

Definitions of the signal words used in these instructions

WARNING!
WARNING indicates a hazardous situation which, if not avoided, could result in death or serious injury.

NOTICE
NOTICE indicates a property damage message.

Note: *Supplementary explanations, information and tips*

General safety instructions

- *The regulators must be installed, started up and serviced by fully trained and qualified personnel only, observing the accepted industry codes and practices. Make sure employees or third persons are not exposed to any danger.*
- *The regulator complies with the requirements of the European Pressure Equipment Directive 97/23/EC. The declaration of conformity issued for a valve bearing the CE marking includes information on the applied conformity assessment procedure.*
  The declaration of conformity can be provided on request.
- *For appropriate operation, make sure that the regulator is only used in applications where the operating pressure and temperatures do not exceed the operating values based on the sizing data submitted in the order.*
- *Note that the manufacturer does not assume any responsibility for damage caused by external forces or any other external factors.*
- *Any hazards which could be caused in the regulator by the process medium or operating pressure are to be prevented by means of appropriate measures.*
- *Proper shipping and appropriate storage are assumed.*

Note: *Non-electric valve versions which do not have a valve body lined with an insulating coating do not have their own potential ignition source according to the ignition risk assessment stipulated in EN 13463-1: 2001, section 5.2, even in the rare incident of an operating fault. Therefore, they* ***do not*** *fall within the scope of Directive 94/9/EC.*
For the connection to equipotential bonding, observe section 6.3 in EN 60097-14: 1977 (VDE 0165, Part 1)

1 Design and principle of operation

The differential pressure regulators are used to maintain the differential pressure between the high-pressure and the low-pressure pipe at a set point which is either fixed (Type 42-38) or adjustable (Type 42-34). The restriction built into the valve body allows for limitation of the flow rate.
The regulators basically consist of a valve with a seat, plug and restriction as well as a closing actuator with an operating diaphragm. The valve and actuator are delivered in separate packaging and need to be connected on site using the coupling nut (11).

The process medium flows through the valve in the direction indicated by the arrow. The free areas of flow released by the orifice (1.4) and the valve plug (3) determine the flow rate $\dot{V}$ and the differential pressure Δp_{plant} across the plant.

Fully balanced valves ensure that the upstream and downstream forces acting on the valve plug are eliminated by a balancing bellows (5) or a balancing diaphragm (5.1). The principle of operation of the regulators with valves balanced by a bellows or by a diaphragm only differ concerning their pressure balancing. Valves balanced by a diaphragm (DN 125 to 250 only) have a balancing diaphragm instead of a balancing bellows (5). The pressure downstream of the orifice (1.4) acts on the outer surface of the metal bellows or balancing diaphragm and the downstream pressure on the inside of the bellows or diaphragm. As a result, the forces created by the upstream and downstream pressures acting on the valve plug are equally balanced.
The regulators in sizes DN 15 to 100 are equipped with a connecting piece (10) for the low-pressure control line between the valve and the actuator.

In differential pressure control, the high pressure (flow) of the plant is transmitted to the bottom diaphragm chamber of the actuator over the high-pressure control line. The pressure downstream of the orifice (1.4) acts on the top diaphragm chamber over the hollow plug stem and the connected low-pressure control line. The differential pressure is converted into a positioning force at the diaphragm (13) and is used to change the position of the valve plug according to the force of the set point springs (16). Depending on the version of the actuator, the set point springs are installed in the actuator to provide a fixed set point (Type 42-38), or they are located outside to allow the set point to be adjusted as required (Type 42-34).

The restriction (1.1) is used to adjust the flow limitation.

The force limiter (20) as well as the internal excess pressure limiter (21) are designed to protect the seat (2) and plug (3) against overload in case of extreme operating conditions.

Table 1 · Regulator configuration

Controller	=	Valve	+	Actuator
Type 42-34 with connecting piece (for DN 15 to 100)		**Type 2423** Balanced		**Type 2424** Adjustable set point
Type 42-38 with connecting piece		**Type 2423** Balanced		**Type 2428** Fixed set point

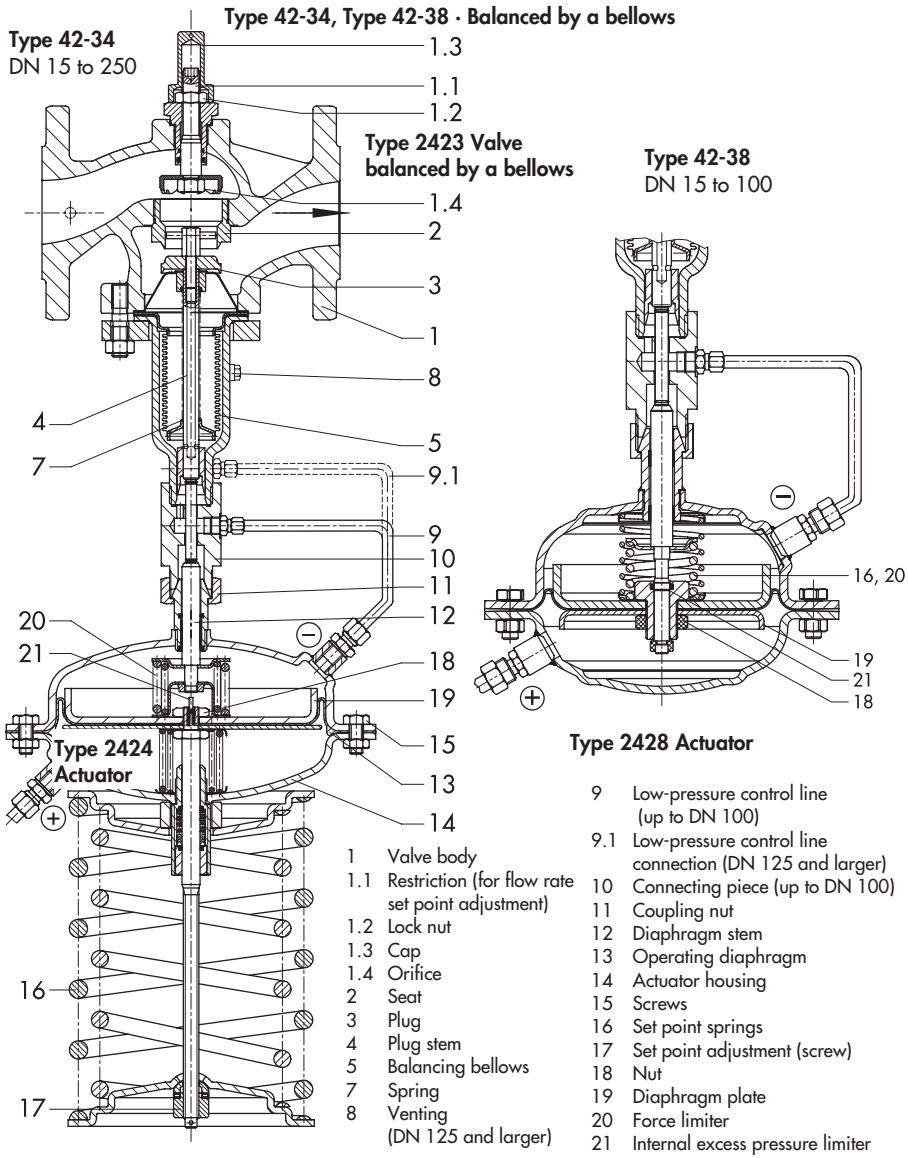

1 Valve body
1.1 Restriction (for flow rate set point adjustment)
1.2 Lock nut
1.3 Cap
1.4 Orifice
2 Seat
3 Plug
4 Plug stem
5 Balancing bellows
7 Spring
8 Venting (DN 125 and larger)
9 Low-pressure control line (up to DN 100)
9.1 Low-pressure control line connection (DN 125 and larger)
10 Connecting piece (up to DN 100)
11 Coupling nut
12 Diaphragm stem
13 Operating diaphragm
14 Actuator housing
15 Screws
16 Set point springs
17 Set point adjustment (screw)
18 Nut
19 Diaphragm plate
20 Force limiter
21 Internal excess pressure limiter

Fig. 1 · Schematic diagrams of regulator with valve ***balanced by a bellows***

Type 42-34 · Balanced by a diaphragm · DN 125 to 250

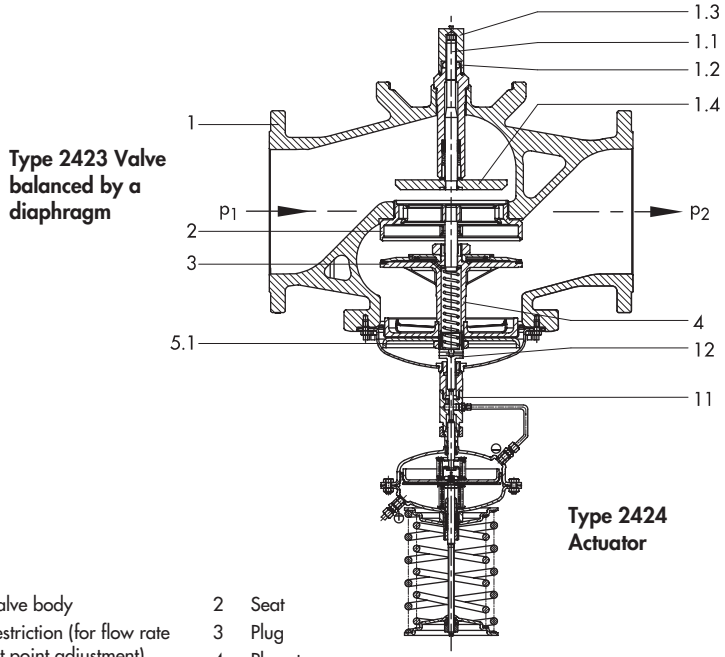

1 Valve body
1.1 Restriction (for flow rate set point adjustment)
1.2 Lock nut
1.3 Cap
1.4 Orifice
2 Seat
3 Plug
4 Plug stem
5.1 Balancing diaphragm
11 Coupling nut
12 Diaphragm stem

Fig. 2 · Schematic diagrams of regulator with valve ***balanced by a diaphragm***

2 Installation

See Figs. 1 and 2

The regulator must be installed in the return flow pipe as shown in the installation schematic in Fig. 5.

When choosing the place of installation, ensure the regulator can be easily accessed after completion of the plant.

NOTICE

The regulator must be installed free of stress. If necessary, support the piping near the connections. However, do not attach supports to the valve or actuator.

Note: *Install a strainer (e.g. SAMSON Type 2 N/2 NI) upstream of the regulator to prevent sealing particles, welding spatter or other impurities carried along by the process medium from impairing the proper functioning of the valve, especially tight shut-off.*

NOTICE
Protect the regulator when it is used to control freezing process media.
On shutting down the plant in areas not free from frost, depressurize and empty the regulator and remove it from the pipeline.

2.1 Mounting position

See Fig. 3 for permissible mounting positions.

Standard installation · Install the valve without the actuator in a horizontal pipeline with the connection for the actuator facing downwards. Make sure the medium flows through the valve in the direction indicated by the arrow. Then connect the actuator (and the connecting piece (10) for versions in sizes DN 15 to 100) to the valve using the coupling nut (11).

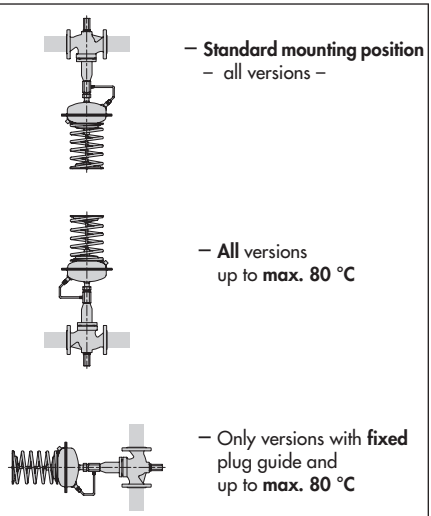

Fig. 3 · Permissible mounting positions

2.2 Strainer

A strainer installed in the flow pipe (Fig. 5) prevents foreign matter and dirt particles in the medium from entering the regulator. The SAMSON product range includes the Type 2 N/2 NI Strainer (refer to Data Sheet T 1010 EN).

Install the strainer upstream of the regulator. Make sure the direction of medium flow corresponds with the direction indicated by the arrow on the strainer. The filter element must be suspended downwards. Remember to leave enough space to remove it.

2.3 Shut-off valve

We recommend installing a hand-operated shut-off valve (Fig. 5) both upstream of the strainer and at the outlet of the return flow pipe to be able to shut down the plant for cleaning and maintenance, and when the plant is not used for longer periods of time.

2.4 Pressure gauge

To monitor the pressures in the plant, install a pressure gauge both upstream and downstream of the regulator (Fig. 5).

2.5 Control line, equalizing tank and needle valve

Control lines · After mounting the actuator, fasten the supplied high-pressure control line to the regulator (standard: 8 mm pipe diameter) routing it from the bottom diaphragm chamber to the high-pressure line (flow pipe) of the plant. Attach the low-pressure control line to the regulator as shown in Figs. 1 and 2.

The control line to be installed on site for pressure tapping at the pipeline must be at least three times the nominal size (DN) away from pipe fittings or instruments that cause flow turbulence (e.g. pipe bends, manifolds, pressure measuring points or other valves) (see Fig. 4.1). How the lines are routed generally depends on the installation location. Preferably connect the control line at the side of the main pipeline (Fig. 4.4).

Do **not** change the pipe diameter of the main pipeline so that it is **off-center**!

Control line kit · A control line kit for tapping pressure directly at the valve body is available as an accessory from SAMSON. Refer to Data Sheet T 3095 EN.

Equalizing tank · An equalizing tank is required for liquids above 150 °C. Install an equalizing tank in the control line directly downstream of the pressure tapping point. The mounting position of the equalizing tank is indicated by an adhesive label on the tank itself as well as by an arrow and the word "top" stamped onto the top of the tank. Adhere to the mounting position and distances prescribed, otherwise the safe functioning of the regulator cannot be guaranteed.

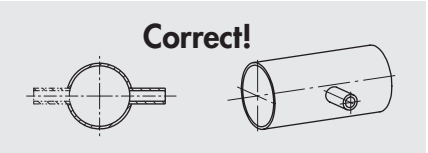

4.4 · Connection at the side – correct

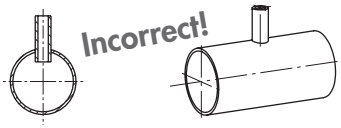

4.3 · Connection at the top – incorrect

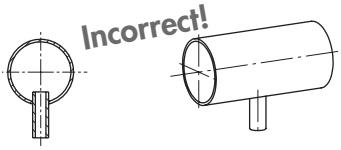

4.2 · Connection at the bottom – incorrect

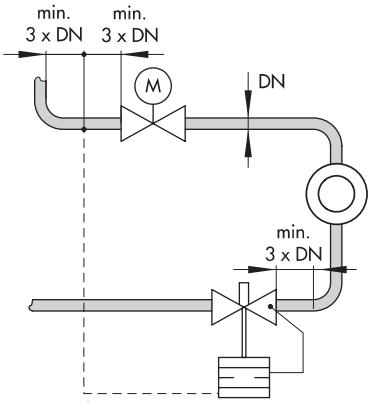

DN = Nominal size

4.1 · Control line connection, depending on how the pipeline is routed

Fig. 4 · Control line connection

Needle valve · If the regulator tends to hunt, we recommend installing a SAMSON needle valve in the control line installed on site at the actuator connection.

Note: *Needle valves, equalizing tanks and compression-type screw fittings can be supplied as required. These accessories are listed in the Data Sheet T 3095 EN.*

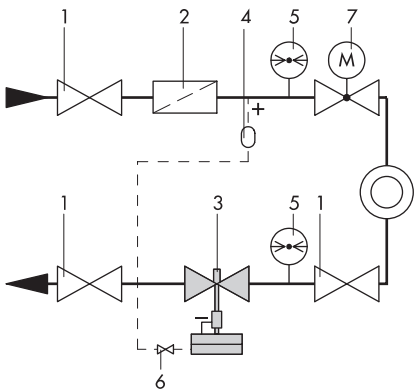

1 Shut-off valve
2 Strainer
3 Differential pressure regulator
4 Equalizing tank (optional)
5 Pressure gauge
6 Needle valve (optional)
7 Motorized valve

Fig. 5 · Typical installation, Type 42-34/42-38 installed in the return flow pipe

3 Operation

See Figs. 1 and 2.

3.1 Start-up

CAUTION!
First start up the regulator after mounting all the components, e.g. valve, actuator and control line.
Make sure the control line (and needle valve) is open and correctly connected before start-up.
For media temperatures above 150 °C, fill the equalizing tank with the process medium (water) before start-up.

Note: *On filling the plant, make sure the orifice (1.4) is open by unscrewing the restriction (1.1) counterclockwise as far as it will go.*

- Open all the valves on the consumer side. Slowly open the shut-off valves starting on the return flow pipe first. In case of valves balanced by a bellows in DN 125 or larger, vent the bellows housing at the stopper (8) located at the side of the bellows housing.

Rinsing the plant · After filling the plant, first completely open the consumers. At the regulator, open the restriction counterclockwise as far as it will go and adjust the maximum differential pressure by tensioning the set point springs to the maximum. Rinse out the pipeline at full flow rate for several minutes. Check the installed strainer (e.g. by measuring the pressure drop) afterwards. Clean the strainer, if necessary.

NOTICE
*When **testing the pressure** of the plant when the regulator is already installed, the pressure must not exceed the nominal pressure of the valve by 1.5 times nor the maximum permissible differential pressure in the actuator (final value of set point range by 1.5 times).*
If higher test pressures are used, unscrew the control lines connected to the actuator and seal openings at the actuator and control lines with stoppers.

3.2 Set point adjustment

3.2.1 Adjusting the differential pressure

Type 42-34 only · Set the required differential pressure by turning the set point screw (17) when the plant is almost closed and the orifice (1.4) is completely open. Then adjust the value for the flow restriction.

- Turn clockwise = Tensioning the springs → To increase the set point
- Turn counterclockwise = Relieving the springs of tension → To reduce the set point.

How to proceed

- Close motorized valve!
- Unscrew cap (1.3) and undo lock nut (1.2).
- Turn the restriction (1.1) counterclockwise as far as it will go (completely opening it) to deactivate the flow restriction.
- Relieve the set point springs (16) of tension.
- Open motorized valve slightly (approx. 10 % travel).
- Adjust the differential pressure by tensioning the set point springs at the set point screw (17).

3.2.2 Adjusting the flow restriction

Open control and shut-off valves as well as all the consumers (minimum plant resistance) to achieve the maximum flow rate.

Close the bypass, if applicable.

Adjust the desired flow limitation by turning the restriction (1.1), monitoring the flow meter in the heat meter (see Table 2 · Flow rate set points for water).

***Note:** Always start the set point adjustment based on a closed restriction.*

- Turn clockwise to close the restriction → Reduces the flow rate.
- Turn counterclockwise to open the restriction → Increases the flow rate.

How to proceed

- Completely close the restriction (1.1) to block the flow rate
- Completely open motorized valve.
- Open restriction (1.1), turning it counterclockwise, until the desired flow rate is reached.
- Initially open the restriction by one turn at a time, while monitoring the flow rate at

the flow meter in the heat meter. Then adjust it in small steps until the required flow rate is constant (generally, ± 2 % deviations are acceptable).

- If the required flow rate is not reached, the differential pressure set point must be increased (see section 3.2.1).
- When the required flow rate is reached, secure the setting of the restriction (1.1) with the lock nut (1.2). Screw back on cap (1.3).
- Lead-seal the set point setting at the set point adjuster (17) and cap (1.3).

If the pressure drop in the plant is known, the adjustment diagrams for water in Figs. 7 to 10 (pages 14 to 17) can also be used.

Example:

Adjusting the flow restriction

Determining the adjustment values using the adjustment diagram in Fig. 7.

A **Type 42-34** Regulator, **DN 25**, **set point range 0.25 to 3.5 m³/h**, is to be used in a plant to limit the flow rate to **3.0 m³/h**.

The pressure drop across the plant is **0.4 bar**.

To which value do you have to adjust the differential pressure set point and how many turns of the set point screw at the restriction will be required?

Solution:

Follow the sequence from **A** to **E** in the diagram in Fig. 7.

The pressure drop Δp across the plant serves as a basis. This value must be known!

Assuming Δp **= 0.4 bar**, this value corresponds to **point A** in the diagram. Add the upper differential pressure across the restriction $\Delta p_{restriction}$, assumed to be **0.2 bar**.

A horizontal line corresponding to this value is drawn from **A** to the right-hand side, resulting in **point B**. Point B is located on the straight line associated with the differential pressure Δp to be adjusted = **0.6 bar** (see section 3.2.1).

From **point B**, the line is further drawn vertically downward to the desired limiting curve for the flow rate (3.0 m³/h), resulting in **point C**.
Then, plot the line from **point C** straight to the curve associated with the nominal size and you will reach **point D**.

The **vertical line** above **point D** which meets **point E** shows the required number of turns of the set point screw.

Result: approx. **1.9 times**

Based on a closed restriction, the set point screw must be turned counterclockwise approx. **1.9 times.**

3.2.3 Pressure conditions in the plant and regulator

When selecting the differential pressure set point or set point range, it is important to observe that the differential pressure set point $\Delta p_{set\ point}$ is calculated from the known pressure drop across the completely open plant Δp_{plant} and the pressure drop directly at the orifice (restriction) $\Delta p_{restriction}$.

Table 2 list the flow rates with the known upper differential pressure value at the restriction for Type 2423 Valves balanced by a bellows and balanced by a diaphragm.

$$\Delta p_{set\ point} = \Delta p_{plant} + \Delta p_{restriction}$$

The minimum required differential pressure Δp_{min} between the **flow pipe** and **return flow pipe** is calculated as follows:

$$\Delta p_{min} = \Delta p_{set\ point} + \left(\frac{\dot{V}}{K_{VS}}\right)^2$$

Fig. 6 shows a schematic diagram of the plant's pressure conditions.

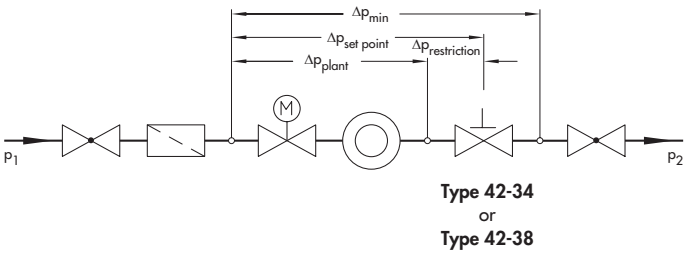

Δp_{min}	Minimum differential pressure between flow and return flow pipes in bar	Δp_{plant}	Differential pressure (pressure drop) across a completely open plant in bar
$\Delta p_{restriction}$	Pressure drop at restriction in bar	$\dot{V}$	Flow rate adjusted in m^3/h
$\Delta p_{set\ point}$	Differential pressure set point adjusted at the regulator in bar	K_{VS}	Valve flow coefficient in m^3/h

Fig. 6 · Pressure conditions in the plant

Table 2 · Flow rate set points for water in m³/h

Type 2423 Valve balanced by a bellows

$\Delta p_{set\ p.}$	Δp_{plant}	$\Delta p_{restr.}$	DN ...		15	20	25	32	40	50	65	80	100	125	150	200	250
0.2 bar	0.1 bar	0.1 bar	$\dot{V}$	min	0.05	0.15	0.25	0.4	0.6	0.9	2	3.5	6.5	11	18	20	26
				max	1.4	2.1	2.4	4.9	7.7	11.2	19	28	44	56	84	126	154
0.5 bar	0.3 bar	0.2 bar	$\dot{V}$	max	2	3	3.5	7	11	16	28	40	63	80	120	180	220
1.0 bar	0.5 bar	0.5 bar	$\dot{V}$	max	3	4.5	5.3	9.5	16	24	40	58	90	120	180	260	300
Max. perm. diff. pressure Δp					25 bar						20 bar		16 bar		12bar	10 bar	

Type 2423 Valve balanced by a diaphragm

Nominal size **DN**	**125**	**150**	**200**	**250**
Flow rate set points in m³/h with $\Delta p_{restriction}$ = 0.2 bar	11 to 120	18 to 180	20 to 320	26 to 350
Max. perm. diff. pressure Δp	12 bar		10 bar	

3.3 Decommissioning

Preferably close the shut-off valves starting from the flow pipe side and then return flow pipe side.

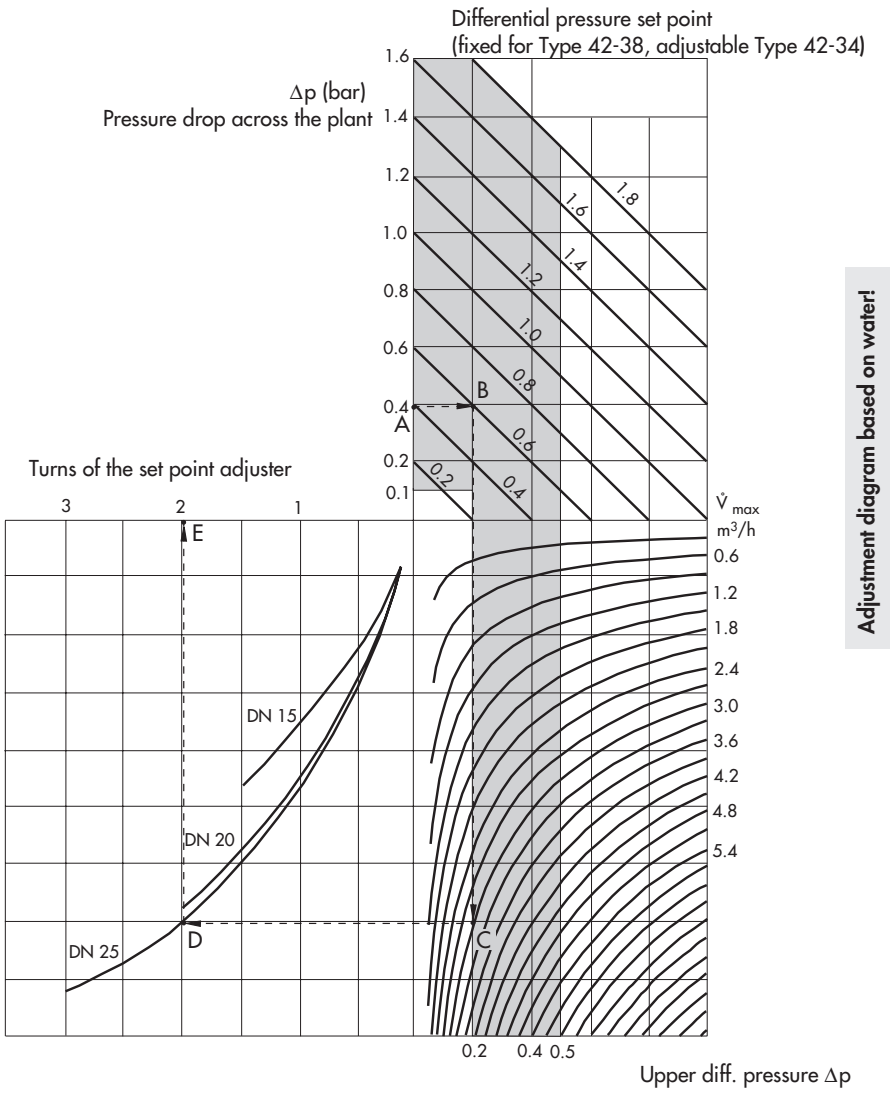

Adjustment diagram based on water!

Fig. 7 · Adjustment diagram DN 15 to 25

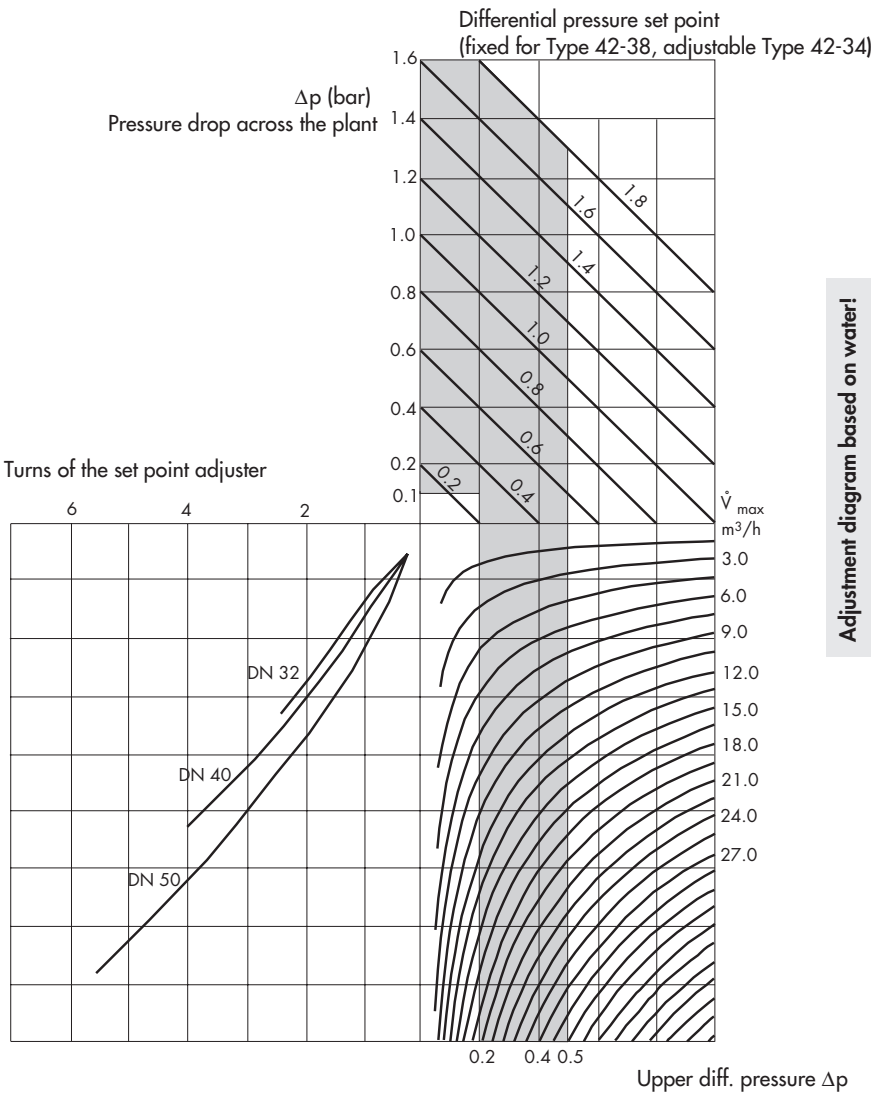

Adjustment diagram based on water!

Fig. 8 · Adjustment diagram DN 32 to 50

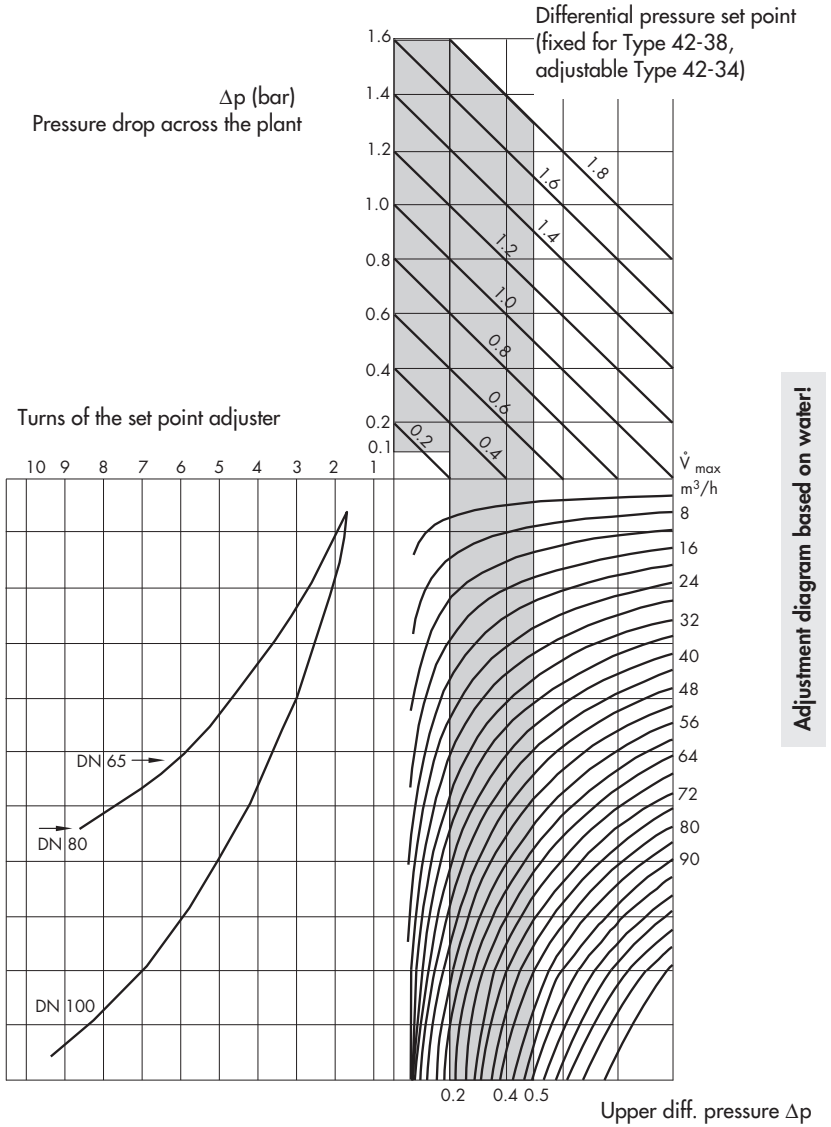

Adjustment diagram based on water!

Fig. 9 · Adjustment diagram DN 65, DN 80 and DN 100

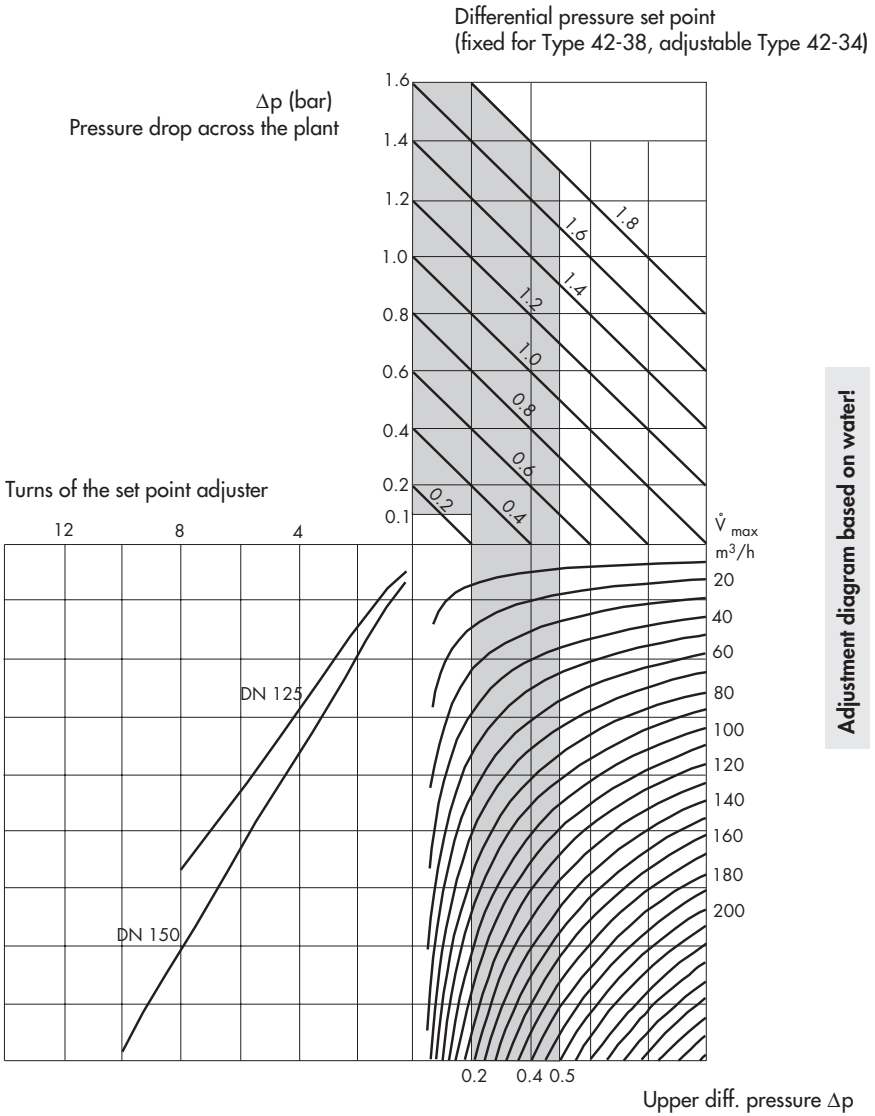

Adjustment diagram based on water!

Fig. 10 · Adjustment diagram DN 125 and DN 150

4 Maintenance · Troubleshooting

The regulators are maintenance free. Nevertheless, they are subject to natural wear, particularly at the seat, plug and operating diaphragm.

Depending on the operating conditions, the regulator needs to be checked at regular intervals to avoid possible malfunctions.

CAUTION!
On performing any work on the regulator, make sure the relevant section of the pipeline is depressurized and, depending on the process medium, drained as well.
For high temperatures, allow the regulator to cool down to ambient temperature before starting any work on it.
Interrupt or shut off the control line to avoid any hazards which could be caused by moving parts.
As valves are not free of cavities, remember that residual process medium might still be contained in the valve.
We recommend to remove the valve from the pipeline after it has been depressurized and drained. Make sure that all the plant sections connected to the control line are also depressurized. If this is not the case, shut off the control line.

Details on malfunctions and the recommended action can be found in the **Table 3 · Troubleshooting**.

Proceed as described in section 4.1 if the operating diaphragm is defective.

Table 3 · Troubleshooting

Malfunction	Possible reasons	Recommended action
Flow rate or differential pressure exceeds the flow rate $\dot{V}$ or differential pressure set point.	Seat and plug leak	Remove valve from pipeline. Clean seat and plug. Replace plug, if necessary. Otherwise send the regulator to SAMSON for repair.
	Operating diaphragm defective	Replace diaphragm (see section 4.1) or send the regulator to SAMSON for repair.
	Control line blocked	Remove control line and clean it. Check and clean the screw joint with orifice plate.
	Valve too large to regulate the flow rate or too small to regulate the differential pressure	Recalculate K_{VS} coefficient and contact SAMSON for further action.
Flow rate or differential pressure does not reach the flow rate $\dot{V}$ or differential pressure set point.	Wrong set point range selected	Check set point range and contact SAMSON for further action.
	Safety equipment, e.g. pressure limiter, has been triggered	Check plant and unlock safety equipment.
	Insufficient pressure drop across the plant Δp	Compare existing differential pressure across the plant with the plant's drag: Min. differential pressure across the plant $\Delta p_{min} = \Delta p_{restriction} + (\dot{V}/K_{VS})^2 + \Delta p_{plant.}$
	Strainer blocked	Drain and clean filter of the strainer.
	Direction of flow, valve incorrectly installed	Install the valve so that the direction of flow is the same as indicated by the arrow.
Control loop hunts	Valve too large for control task	Recalculate K_{VS} coefficient and contact SAMSON for further action.
	Restriction (or needle valve) is missing in a control line to dampen pulsation	Install a needle valve in the control line and start to close it until the control loop becomes stable. **NOTICE** Do not completely close needle valve.

Contact SAMSON if the malfunction cannot be remedied using the above table.

4.1 Replacing the operating diaphragm

See Figs. 1 and 2.

If just the operating diaphragm is defective, it can be replaced without having to remove the valve from the pipeline. Relieve the relevant section of the pipeline of pressure and drain it. Unscrew the control lines and separate the actuator from the valve.

Type 2428 Actuator

1. Place actuator upside down.
2. Undo screws (15) at the actuator. Pull out the top cover (+ chamber) together with diaphragm plate (19) and diaphragm (13) as well as the diaphragm stem (12).
3. Unscrew nut (18), while holding the diaphragm stem stationary using a suitable tool.
4. Lift off diaphragm plate (19) and pull out diaphragm (13).
5. Check the diaphragm stem (12) for scoring and replace it with a new one, if necessary.

NOTICE
The stem surface is roller-burnished. Never regrind the stem!

---

6. Insert a new diaphragm.
7. Proceed in the reverse order to reassemble the actuator. Secure nut (18) from turning with suitable adhesive (e.g. 8121-0230 from SAMSON). Use lubricant from SAMSON (8150-0111).
8. Check screw fittings for dirt and clean them, if necessary.

Start up as described in section 3.1.

Type 2424 Actuator

1. Place actuator upside down.
2. Relieve set point springs (16) completely of tension by turning the set point adjuster (17) counterclockwise.
3. Take off set point springs (16) and set point adjuster (17).
4. Undo screws (15) at the actuator. Remove top cover (+ chamber) and take out inner springs in the + chamber.
5. Lift out diaphragm plate (19) together with diaphragm (13), diaphragm stem (12) and excess pressure limiter unit . Remove force limiter (20) together with stem (12).
6. Check stem (12) for scoring and replace it with a new one, if necessary.

NOTICE
The stem surface is roller-burnished. Never regrind the stem! When exchanging the diaphragm stem, the nipple (guide bushing) in the actuator cover must also be replaced.

---

7. Unscrew nuts (18) and pull out diaphragm stem.
8. Remove diaphragm (13) and insert a new diaphragm.
9. Insert diaphragm stem. Tighten nuts (18) to fix diaphragm, diaphragm plate and washer into place. Secure nut (18) from turning with suitable adhesive (e.g. 8121-0230 from SAMSON).
10. Proceed in the reverse order to reassemble the actuator. Use lubricant (8150-0111).
11. Check screw fittings for dirt and clean them, if necessary.

Start up as described in section 3.1.

5 Nameplates

Valve nameplates

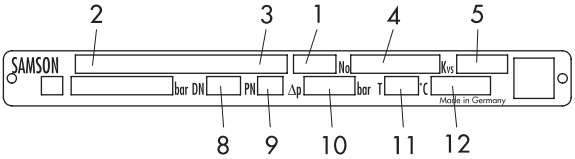

DIN version

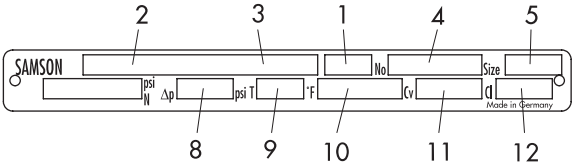

ANSI version

Valve

1 Valve type
2 Model number
3 Model number index
4 Order number or order date
5 K_{VS} coefficient
8 Nominal size
9 Nominal pressure
10 Perm. differential pressure in bar
11 Perm. temperature in °C
12 Body material

ANSI version

5 Nominal size
8 Perm. differential pressure in psi
9 Perm. temperature in °F
10 Body material
11 Cv coefficient (K_{VS} x 1.17)
12 ANSI Class (pressure rating)

Actuator nameplate

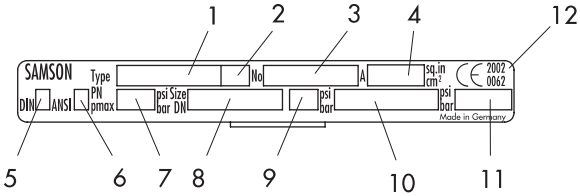

Actuator

1 Model number
2 Model number index
3 Order number or order date
4 Effective diaphragm area
5 Labeling acc. to DIN
6 Labeling acc. to ANSI
7 Max. perm. pressure
8 Nominal size
9 Differential pressure at restriction
10 Set point range
11 Diaphragm material
12 Year of production

Fig. 11 · Nameplates

6 Dimensions and weights

Valve balanced by a bellows

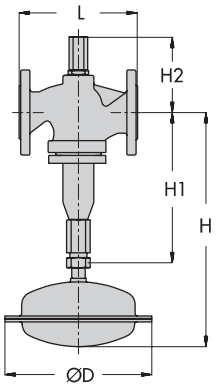

Type 42-38
Valve balanced by a bellows
– see Table 5 on p. 23 –

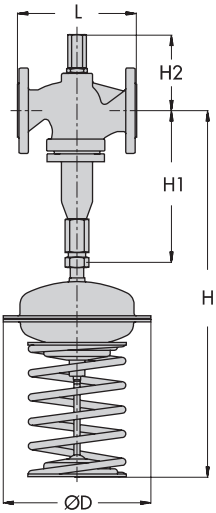

Type 42-34 ·
Valve balanced by a bellows
– see Table 5 on p. 23 –

Fig. 12 · Dimensions, valve balanced by a bellows

Valve balanced by a diaphragm

Table 4 · Dimensions in mm and weights

Type 42-34 · Valve balanced by a diaphragm

Nom. size DN	125	150	200	250
Length L	400	480	600	730
Height H1	720	745	960	
Height H2	295	325	345	375
Weight in kg	95	115 [1]	290 [1]	305 [1]

[1] With 640 cm² actuator

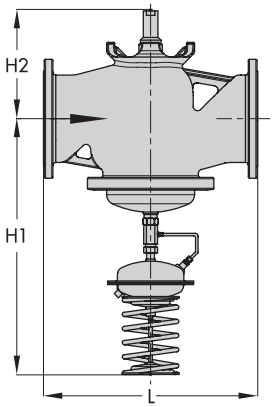

Type 42-34 · Balanced by a diaphragm

Fig. 13 · Dimensions, valve balanced by a diaphragm

Table 5 · Dimensions in mm and weights · Type 24-34, Type 24-38 · Balanced by a bellows

Nominal size		**DN**	**15**	**20**	**25**	**32**	**40**	**50**	**65**	**80**	**100**	**125**	**150**	**200**	**250**
Length L			130	150	160	180	200	230	290	310	350	400	480	600	730
Height H1			285						360		415	460	590	730	
Height H2	Other materials		115			135			195		220	265	295	400	
	Forged steel		113	–	130	–	155	161	–	–	–	–	–	–	–
Type 42-34 Differential Pressure Regulator with Flow Limitation · Balanced by a bellows															
Set point range **0.1** to **0.6 bar**	Height H		670						745		800	990	1120	1260	
	Actuator		Ø D = 225 mm · A = 160 cm² [2]						Ø D = 285 mm A = 320 cm²			Ø D = 390 mm A = 640 cm²			
	Weight [1] in kg		16	16.5	17.5	24	24.5	27	46	51	65	135	185	425	485
Set point range **0.2** to **1 bar**	Height H		670						745		800	990	1120	1260	
	Actuator		Ø D = 225 mm · A = 160 cm² [2]									Ø D = 390 mm A = 640 cm²			
	Weight [1] in kg		16	16.5	17.5	24	24.5	27	42	47	61	135	185	425	485
Set point range **0.5** to **1.5 bar**	Height H		670						745		800	880	1040	1210	
	Actuator		Ø D = 225 mm · A = 160 cm² [2]									Ø D = 285 mm A = 320 cm²			
	Weight [1] in kg		16	16.5	17.5	24	24.5	27	42	47	61	125	175	415	475
Type 42-38 Differential Pressure Regulator with Flow Limitation · Balanced by a bellows															
Set point range **0.2 0.3 0.4 · 0.5 bar**	Height H		450						525		585	–			
	Actuator		Ø D = 225 mm · A = 160 cm²						Ø D = 285 mm A = 320 cm²						
	Weight [1] in kg		11.5	12	13	19.5	20	22.5	38	43	57				

[1] The weight is based on the version made of EN-JL1040/PN 16 (GG-25). +10 % for other materials

[2] Optionally with 320 cm² actuator

7 Customer service

Should any malfunctions or any defect occur, SAMSON's After-Sales Service is prepared to help you on site.

You can also send the defective regulator directly to your local SAMSON representative for repair. Addresses of SAMSON subsidiaries, agencies and service centers are listed in the product catalogs and in the Internet at www.samson.de.

To allow SAMSON to find the fault and to have an idea of the installation situation, specify the following details (refer to the nameplate):

- Type and nominal size of the valve
- Order number and model number
- Upstream and downstream pressure
- Flow rate in m^3/h
- Has a strainer been installed?
- Sketch of the installation

8 Technical data

Table 6 · Type 42-34, Type 42-38

Valve balanced by a bellows

Type		42-34	42-38
Nominal size		DN 15 to 250	DN 15 to 100
Nominal pressure		PN 16, 25 or 40 (acc. to DIN EN 12516-1)	
Max. perm. temperature	Valve body	See pressure-temperature diagram in T 3013 EN	
	Actuator [1]	With equalizing tank: Liquids up to 220 °C Without equalizing tank: Liquids up to 150 °C Air and gases up to 80 °C	
Pressure at which the internal excess pressure limiter responds, depending on diaphragm area A		160 cm² = 1.2 bar 320 cm² = 0.6 bar 640 cm² = 0.3 bar	160 cm² = 0.6 bar 320 cm² = 0.3 bar
Set point ranges		0.1 to 0.6 bar · 0.2 to 1 bar 0.5 to 1.5 bar	0.2 · 0.3 · 0.4 · 0.5 bar
Leakage rate		≤ 0.05 % of K_{VS} coefficient	

[1] Higher temperatures on request

Valve balanced by a diaphragm

Type		42-34
Nominal size		**DN 125** to **250**
Nominal pressure		PN 16, 25 or 40 (acc. to DIN EN 12516-1)
Max. perm. temperature	Valve body	See pressure-temperature diagram in T 3013 EN
	Actuator [1]	With equalizing tank: Liquids up to 220 °C Without equalizing tank: Liquids up to 150 °C Air and gases up to 80 °C
Pressure at which the internal excess pressure limiter responds, depending on diaphragm area A		160 cm² = 1.2 bar 320 cm² = 0.6 bar 640 cm² = 0.3 bar
Set point ranges		0.1 to 0.6 bar · 0.2 to 1 bar · 0.5 to 1.5 bar
Leakage rate		≤ 0.05 % of K_{VS} coefficient

[1] Higher temperatures on request

Table 7 · Data for Type 2423 Valve

Valve balanced by a bellows · K_{VS} coefficients, z values and max. perm. differential pressures

Nominal size DN	15	20	25	32	40	50	65	80	100	125	150	200	250
Travel	10 mm						16 mm			22 mm			
K_{VS} coefficient m³/h	4	6.3	8	16	20	32	50	80	125	190	280	420	500
z value	0.65	0.6	0.55		0.45	0.4		0.35				0.3	
Max. perm. diff. pressure Δp	25 bar						20 bar		16 bar		12 bar	10 bar	

Valve balanced by a diaphragm · K_{VS} coefficients and max. perm. differential pressures

Nominal size	DN	125	150	200	250
K_{VS} coefficient m³/h	22 mm travel	190	290	550	600
	35 mm travel	250	380	650	800
Max. perm. diff. pressure Δp		12 bar		10 bar	

See Table 2 on page 13 for the flow rate set points for both valve versions.

SAMSON AG · MESS- UND REGELTECHNIK
Weismüllerstraße 3 · 60314 Frankfurt am Main · Germany
Phone: +49 69 4009-0 · Fax: +49 69 4009-1507
Internet: http://www.samson.de

EB 3013 EN

S/Z 2009-09