## Self-operated Regulators

# Flow and Differential Pressure Regulator Type 42-37
# Flow and Differential Pressure or Flow and Pressure Regulator Type 42-39


Type 42-37


Type 42-39

*Flow and differential pressure or pressure regulators*

# Mounting and Operating Instructions

## EB 3017 EN

Edition September 2008

Contents Page



## Definitions of the signal words used in these instructions

***CAUTION!***
*CAUTION indicates a hazardous situation which, if not avoided, may result in injury.*

***NOTICE***
*NOTICE indicates a property damage message.*

***Note:*** *Supplementary explanations, information and tips*

***General safety instructions***

- *The regulators must be installed, started up and serviced by fully trained and qualified personnel only, observing the accepted industry codes and practices. Make sure employees or third persons are not exposed to any danger.*
- *The regulator complies with the requirements of the European Pressure Equipment Directive 97/23/EC. The declaration of conformity issued for a valve bearing the CE marking includes information on the applied conformity assessment procedure.*
  *The declaration of conformity can be provided on request.*
- *For appropriate operation, make sure that the regulator is only used in applications where the operating pressure and temperatures do not exceed the operating values based on the sizing data submitted in the order.*
  *Note that the manufacturer does not assume any responsibility for damage caused by external forces or any other external factors.*
- *Any hazards which could be caused in the regulator by the process medium or operating pressure are to be prevented by means of appropriate measures.*
- *Proper shipping and appropriate storage are assumed.*

***Note:*** *Non-electric valve versions which do not have a valve body lined with an insulating coating do not have their own potential ignition source according to the ignition risk assessment stipulated in EN 13463-1: 2002, section 5.2, even in the rare incident of an operating fault. Therefore, they* ***do not*** *fall within the scope of Directive 94/9/EC.*
*For connection to the equipotential bonding system, observe the requirements specified in section 6.3 of EN 60079-14: 2003 (VDE 0165 Part 1).*

# 1 Design and principle of operation

The regulators limit the flow rate in the pipeline. The set point for the flow rate is adjusted at the restriction and the set point for the differential pressure or the downstream pressure is adjusted at the actuator. The largest signal is always used to actuate the valve.

The regulators mainly consist of the **Type 2423 Valve** with seat, plug and restriction together with the **Type 2427** or **Type 2429 Closing Actuator** with operating diaphragms. Valve and actuator are delivered separately and must be assembled on site using a coupling nut

The medium flows through the valve in the direction indicated by the arrow. The position of the restriction (1.1) and the area released by the valve plug (3) determine the flow rate and the differential pressure $\Delta p$ across the plant.

The valve is fully balanced. The forces acting on the valve plug created by the upstream and downstream pressures are balanced by a balancing bellows (5) or balancing diaphragm (Type 2423 balanced by a diaphragm, DN 125 to 250).

The principle of operation of the regulators with valves balanced by a bellows or diaphragm only differ concerning the pressure balancing. The valves balanced by a diaphragm have a balancing diaphragm (Fig. 2) instead of a bellows (Fig. 1). The downstream pressure $p_2$ acts on the inside and the upstream pressure $p_1$ on the outside of the diaphragm. As a result, the forces acting on the valve plug are balanced out.

**Type 42-37:** The high pressure of $\Delta p$ is transmitted through the control line (18) to the diaphragm chamber D. The high pressure of the flow rate ($\dot{V}$) upstream of the restriction (1.1) is transmitted through the control line (19) to the diaphragm chamber C. This pressure is equal to the low pressure of $\Delta p$. The low pressure of $\dot{V}$ downstream of the restriction is transmitted through holes in the plug and diaphragm stems to the diaphragm chamber A.

If, for example, the differential pressure rises, the positioning force at the bottom operating diaphragm (13.2) rises, too. This change in force causes the diaphragm stems (12.2 and 12.1) and the valve plug (3) to move in the closing direction until the set point adjusted at the set point spring (16) is reached.

If the flow rate increases, the differential pressure at the restriction (1.1) and the resulting positioning force at the top diaphragm (13.1) increase. This change in differential pressure at the restriction causes the top diaphragm stem (12.1) to push the plug stem and the valve plug (3) in the closing direction until the adjusted flow set point is reached. The largest signal is always used to actuate the valve.

The overload protection (force limiter with internal excess pressure limiter) (15) protects the seat, plug and plant during extreme operating conditions against overloading.

**Type 42-39:** The principle of operation is almost the same as for Type 42-37. However, the high pressure of the flow rate $\dot{V}$ is separate from the low pressure of the differential pressure $\Delta p$ in the Type 2429 Actuator. The diaphragm chambers for these pressures have their own control line connections.

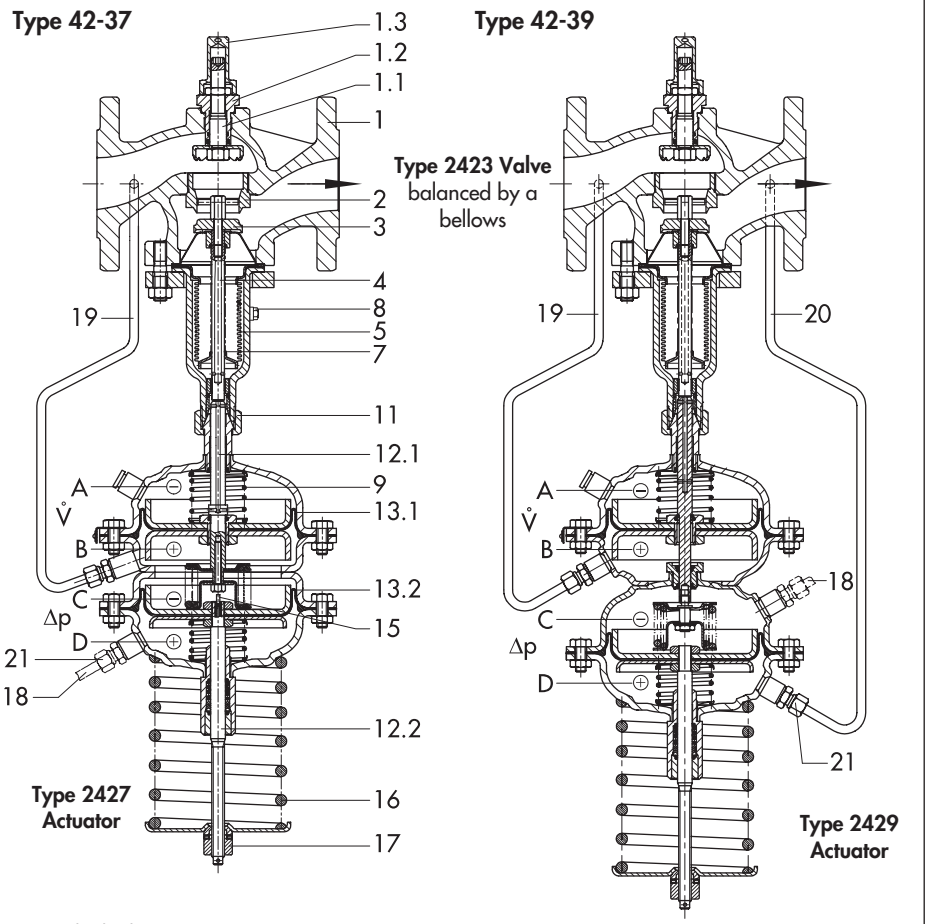


| | | | | | |
|---|---|---|---|---|---|
| 1 | Valve body | 7 | Spring | 15 | Overload protection (force limiter with internal excess pressure limiter) |
| 1.1 | Restriction for flow set point | 8 | Venting (DN 125 and higher) | 16 | Set point spring |
| 1.2 | Lock nut | 9 | Differential pressure spring | 17 | Set point adjustment |
| 1.3 | Cap | 11 | Coupling nut | 18 | Control line on site |
| 2 | Seat | 12.1 | Top diaphragm stem | 19 | Control line (+) $\dot{V}$ |
| 3 | Plug | 12.2 | Bottom diaphragm stem | 20 | Control line (+) Δp |
| 4 | Plug stem | 13.1 | Top operating diaphragm | 21 | Restriction to dampen signal |
| 5 | Balancing bellows | 13.2 | Bottom operating diaphragm | | |

*Fig. 1 · Sectional drawings of regulators with valves balanced by a bellows*

**Type 42-37/Type 42-39 · DN 125 to 250 · Balanced by a diaphragm**

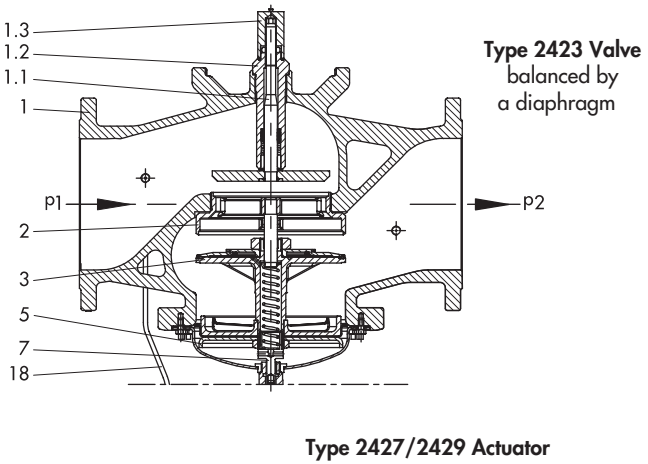


| | | | |
|---|---|---|---|
| 1 | Valve body | 3 | Plug |
| 1.1 | Restriction for flow set point | 5 | Balancing diaphragm |
| 1.2 | Lock nut | 7 | Plug stem |
| 1.3 | Cap | 18 | Control line |
| 2 | Seat | | |

*Fig. 2 · Sectional drawing of regulator with valve balanced by a diaphragm*

**Note on Type 42-37 DoT** and **Type 42-39 DoT**

These regulators can also be used for temperature control and limitation in combination with Type 2231 Temperature Regulator by using a double adapter DoT.

Refer to the following Mounting and Operating Instructions in this case:

**EB 3019 EN** for DoT double adapter
and
**EB 2231 EN** for Type 2231 to 2235 Control Thermostats.

# 2 Installation

Install **Type 42-37** Regulator in the **low pressure line** (return flow) of the plant.

Install **Type 42-39** Regulator in the **high pressure line** (flow) of the plant.

Refer to installation schematics in Fig. 3.

On selecting the position of installation, make sure that the regulator can still be easily accessed after completion of the plant.

***NOTICE***

*The regulator must be installed free of stress. If necessary, support the piping near the connections. However, do not attach supports to the valve or actuator.*

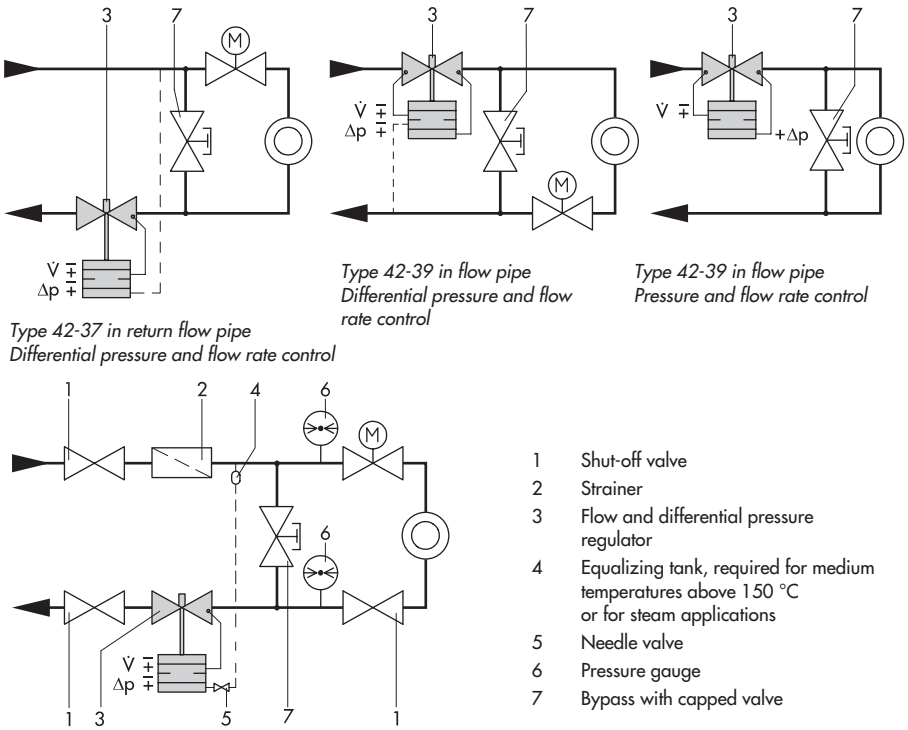


*Type 42-37 in return flow pipe*
*Differential pressure and flow rate control*

*Type 42-39 in flow pipe*
*Differential pressure and flow rate control*

*Type 42-39 in flow pipe*
*Pressure and flow rate control*

1 Shut-off valve
2 Strainer
3 Flow and differential pressure regulator
4 Equalizing tank, required for medium temperatures above 150 °C or for steam applications
5 Needle valve
6 Pressure gauge
7 Bypass with capped valve

*Fig. 3 · Installation schematics (top) and typical installation (bottom)*

***Note:*** *Install a strainer (e.g. SAMSON Type 2 N/2 NI) upstream of the regulator to prevent sealing particles, welding spatter or other impurities carried along by the process medium from impairing the proper functioning of the valve, especially tight shut-off.*

## 2.1 Mounting position

See Fig. 4 for permissible mounting positions.

**Standard mounting position** · Install valve without actuator in a horizontal pipeline with the connection for the actuator facing downwards. Make sure the medium flows through the valve in the direction indicated by the arrow. Then connect the actuator to the valve using the coupling nut (11).

***NOTICE***
*Protect the regulator when it is used to control freezing process media.*
*On shutting down the plant in areas not free from frost, depressurize and empty the regulator and remove it from the pipeline.*

## 2.2 Control line, equalizing tank and needle valve

**Control lines** · Control lines preferably using 8 x 1 mm steel or stainless steel pipe must be provided at the site of installation.

Connect the control line for pressure tapping in Type 42-37 to the pipeline upstream of the consumer. Make sure the pressure tapping point is at least 3 x DN away from any instruments (pipe manifolds, distributors, other valves) that can cause turbulence in the flow

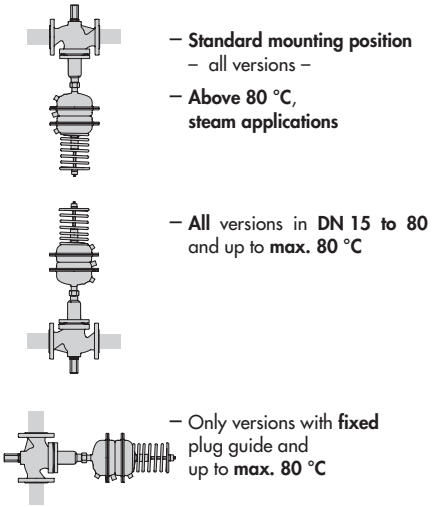


*Fig. 4 · Permissible mounting positions*

(Fig. 5.1). How the line is routed generally depends on the installation location.

The same rules apply to the control line installed on site for Type 42-39 (connected downstream of the consumer).

We recommend connecting the control line at the side of the main pipeline (Fig. 5.4).

Do **not** change the pipe diameter of the main pipeline so that it is **off center**!

**Type 42-37**

Attach the supplied low-pressure control line to the regulator as shown in Fig. 1.

At the site of installation, route the high-pressure control line with 8 mm (standard), 10 mm or 12 mm pipe diameter from the bottom diaphragm chamber to the high-pressure line (flow) of the plant.

**Type 42-39**

Attach the supplied control lines to the regulator as shown in Fig. 1. When used as a flow and differential pressure regulator, additionally route a control line at the site of installation from diaphragm chamber C to the low-pressure line (return flow) of the plant. When used as a flow and pressure regulator, leave the connection for diaphragm chamber C open.

**Control line kit** · A control line kit for tapping pressure directly at the valve body is available as an accessory from SAMSON. Refer to Data Sheet T 3095 EN.

**Needle valve** · If the regulator tends to hunt, we recommend installing a SAMSON needle valve in the control line routed on site at the actuator connection.

---

***Note:*** *Needle valves, equalizing tanks and compression-type screw fittings can be supplied as required. These accessories are listed in the Data Sheet T 3095 EN.*

---

**Equalizing tank** · An equalizing tank is required for liquids above 150 °C. Prior to start-up, fill the equalizing tank with the medium to be regulated. This prevents hot medium coming into direct contact with the diaphragm.

Depending on how the regulator is installed, install the equalizing tank in any control line used with hot media. The mounting position of the equalizing tank is indicated by an adhesive label on the tank itself as well as by an arrow and the word "top" stamped onto the top of the tank.

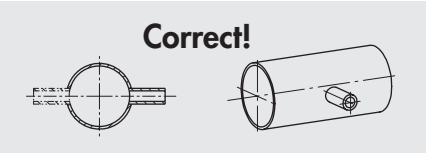


*5.4 · Connection at the side – correct*

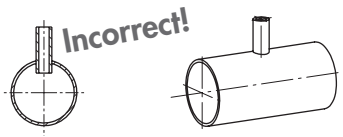


*5.3 · Connection at the top – incorrect*

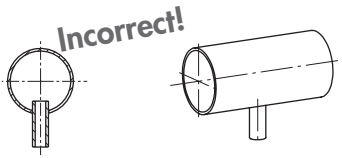


*5.2 · Connection at the bottom – incorrect*

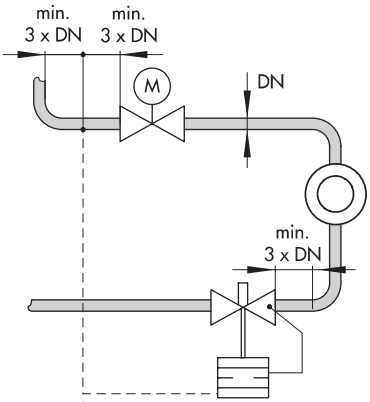


DN = Nominal size

*5.1 · Control line connection, depending on how the pipeline is routed*

*Fig. 5 · Connection of control lines*

Install the equalizing tank near to the pressure tapping point in the flow pipe or at the same height as the valve (Fig. 6) to ensure that the control line reaches from at least the mid axis the valve to the actuator. This ensures that a hot medium can cool down sufficiently.

***NOTICE***
*Adhere to the mounting position and distances prescribed, otherwise the safe functioning of the regulator cannot be guaranteed.*

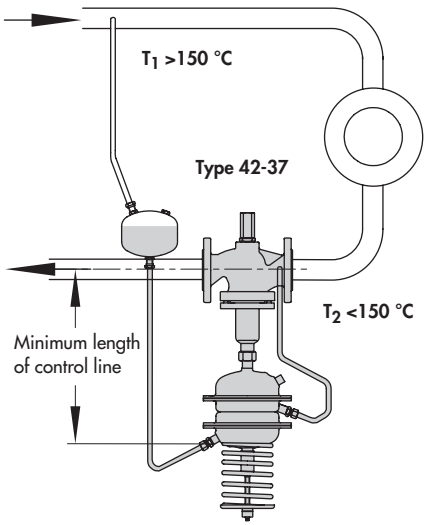


*Fig. 6 · Type 42-37 with equalizing tank*

## 2.3 Strainer

A strainer installed in the flow pipe prevents foreign matter and dirt particles in the medium from entering the regulator. The SAMSON product range includes the Type 2 N/2 NI Strainer (refer to Data Sheet T 1010 EN).

Install the strainer upstream of the regulator. Make sure the direction of medium flow corresponds with the direction indicated by the arrow on the strainer. The filter element must be suspended downwards or be located at the side for applications with steam. Remember to leave enough space to remove it.

## 2.4 Shut-off valve

We recommend installing a hand-operated shut-off valve (Fig. 3) both upstream of the strainer and at the outlet of the return flow pipe to be able to shut down the plant for cleaning and maintenance, and when the plant is not used for longer periods of time.

## 2.5 Pressure gauge

To monitor the pressures in the plant, install a pressure gauge both upstream and downstream of the regulator. Install the pressure gauge on the downstream side behind the downstream pressure tapping point.

# 3 Operation

## 3.1 Start-up

***CAUTION!***
*First start up the regulator after mounting all the components, e.g valve, actuator and control lines.*
*Make sure the control lines are open and correctly connected before start-up.*

***Note:*** *On filling the plant, make sure the restriction (1.1) is open by turning the adjustment screw counterclockwise as far as it will go.*

- Open all the valves on the consumer side. Slowly open the shut-off valves starting on the return flow pipe first. In case of valves balanced by a bellows in DN 125 or larger, vent the bellows housing (8) at the stopper located at the side of the bellows housing.

If needle valves are installed in the control lines, open them before start-up. Fill equalizing tanks with the process medium before start-up.

**Rinsing the plant** · After filling the plant, first completely open the consumers. If this is not possible open the bypass. Open the restriction for flow rate adjustment with a differential pressure set point spring at maximum compression. Rinse out the pipeline at full flow rate for several minutes. Check the installed strainer (e.g. by measuring the pressure drop) afterwards. Clean the strainer, if necessary.

***NOTICE***
*The pressure at the actuator must not exceed the **nominal pressure by 1.5 times** on testing the pressure of the plant when the regulator is already installed*
*The control lines must route the test pressure to the actuator at the same time to prevent the actuator diaphragms from being damaged.*

*When Type 42-39 is used as a flow and pressure regulator, do not connect the control line to diaphragm chamber C.*

## 3.2 Set point adjustment

### 3.2.1 Set point for flow rate

***Note:*** *Before adjusting the flow rate, you first need to adjust the set point for the differential pressure (or pressure) to its maximum value, To do this, turn the nut (17) clockwise to load the set point spring (16).*
*The control valves and shut-off valves as well as all consumers or a bypass valve, if applicable, must be opened to reach the maximum flow rate, but without the high differential pressure (pressure) being able to close the valve.*

Turn the restriction (1.1) until the required flow rate is reached, by reading, for example, the flow rate reading off a heat meter (see Table 1 · Flow rate set point ranges).

***Note:*** *Always start the adjustment from a closed restriction!*

- Turn clockwise to close the restriction. This reduces the flow rate.
- Turn counterclockwise to open the restriction. This raises the flow rate.

You can also use the adjustment diagrams for water in Figs. 7, 8 and 9 on the following pages to help you make the flow rate adjustment.

---

***Note:*** *The differential pressure at the restriction $\Delta p_{restriction}$ is fixed at either* ***0.2 bar*** *or* ***0.5 bar*** *(see nameplate) by the differential pressure spring(s) (9) in the actuator.*

---

- Unscrew cap (1.3) and undo lock nut (1.2). Turn the adjustment screw clockwise as far as it will go.
- Find the flow set point in the diagram and determine how many turns are required.
- Turn the screw counterclockwise (based on a closed restriction) until the selected set point is adjusted.
- Check the flow rate at the heat meter and correct, if necessary.
- When the required flow rate is reached, lock the screw in position with the lock nut (1.2) and screw cap (1.3) back on. Lead-seal cap, if necessary.
- Close the open bypass valve again, if applicable.

## Table 1 · Flow rate set point ranges for water

**Type 2423 · Balanced by a bellows**

| Nominal size DN | 15 | 20 | 25 | 32 | 40 | 50 | 65 | 80 | 100 | 125 | 150 | 200 | 250 |
|---|---|---|---|---|---|---|---|---|---|---|---|---|---|
| **Flow rate set point ranges for water in m³/h** | | | | | | | | | | | | | |
| Differential pressure at restriction $\Delta p_{restriction}$= 0.2 bar | 0.05 to 2 | 0.15 to 3 | 0.25 to 3.5 | 0.4 to 7 | 0.6 to 11 | 0.9 to 16 | 2 to 28 | 3.5 to 35 | 6.5 to 63 | 11 to 80 | 18 to 120 | 20 to 180 | 26 to 220 |
| Differential pressure at restriction $\Delta p_{restriction}$ = 0.5 bar | 0.15 to 3 | 0.25 to 4.5 | 0.4 to 5.3 | 0.6 to 9.5 | 0.9 to 16 | 2 to 24 | 3.5 to 40 | 6.5 to 55 | 11 to 90 | 18 to 120 | 20 to 180 | 26 to 260 | 30 to 300 |

**Type 2423 · Balanced by a diaphragm**

| Nominal size DN | 125 | 150 | 200 | 250 |
|---|---|---|---|---|
| **Flow rate set point ranges for water in m³/h** | | | | |
| Differential pressure at restriction $\Delta p_{restriction}$ = 0.2 bar | 11 to 120 | 18 to 180 | 20 to 320 | 26 to 350 |

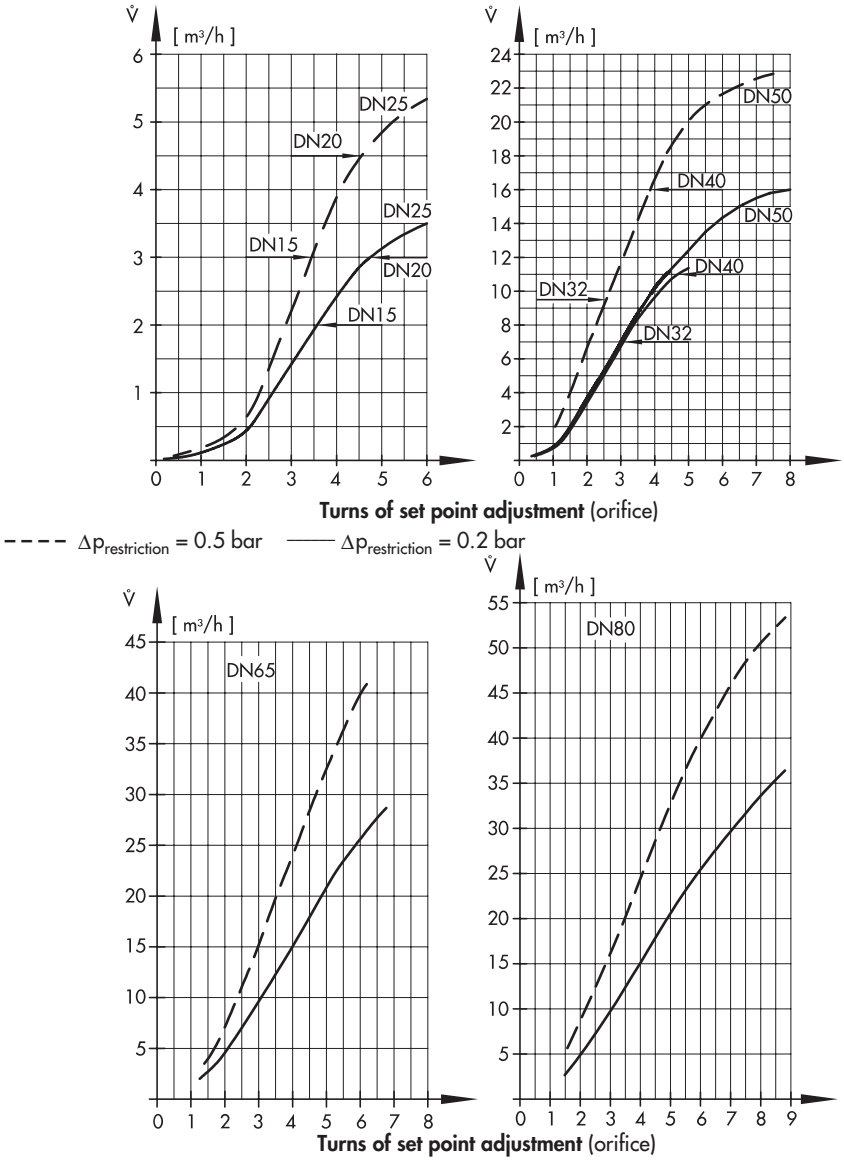


*Fig. 7 · Adjustment diagram for Type 2423* ***balanced by a bellows****, DN 15 to 80*

Adjustment diagrams valid for water

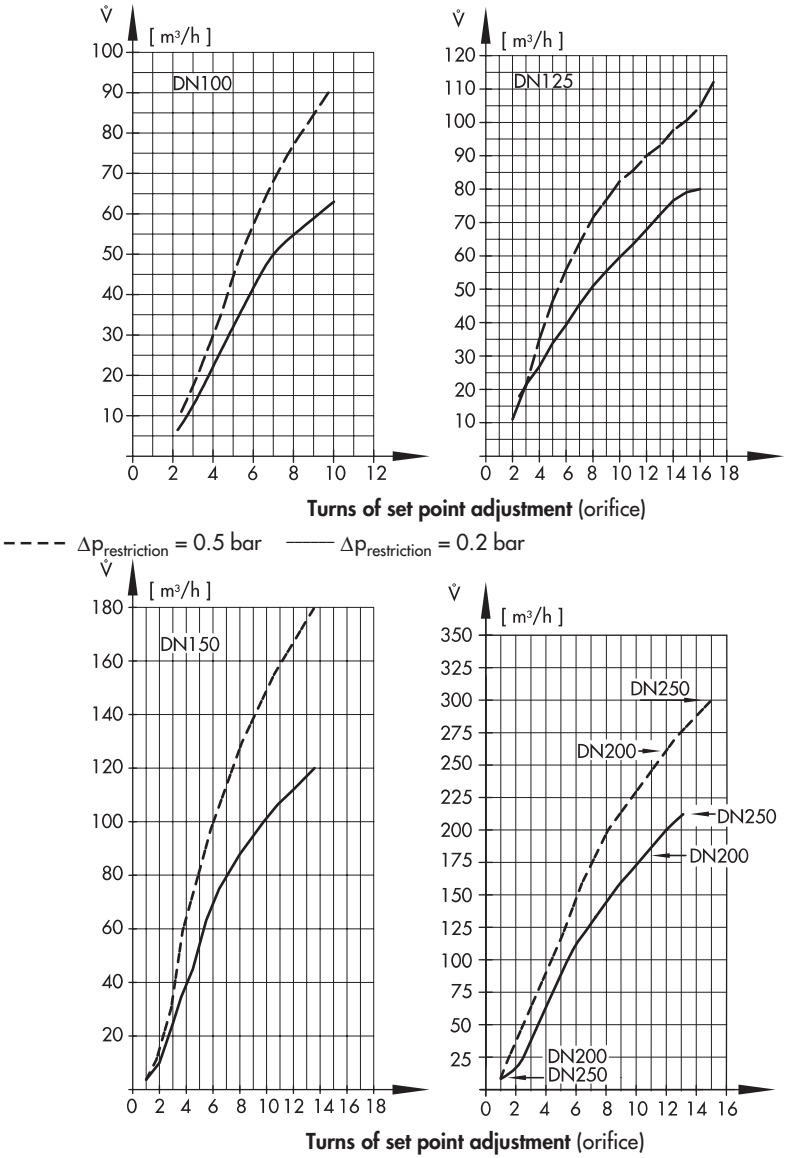


*Fig. 8 · Adjustment diagram for Type 2423* ***balanced by a bellows****, DN 100 to 250*

Adjustment diagrams valid for water

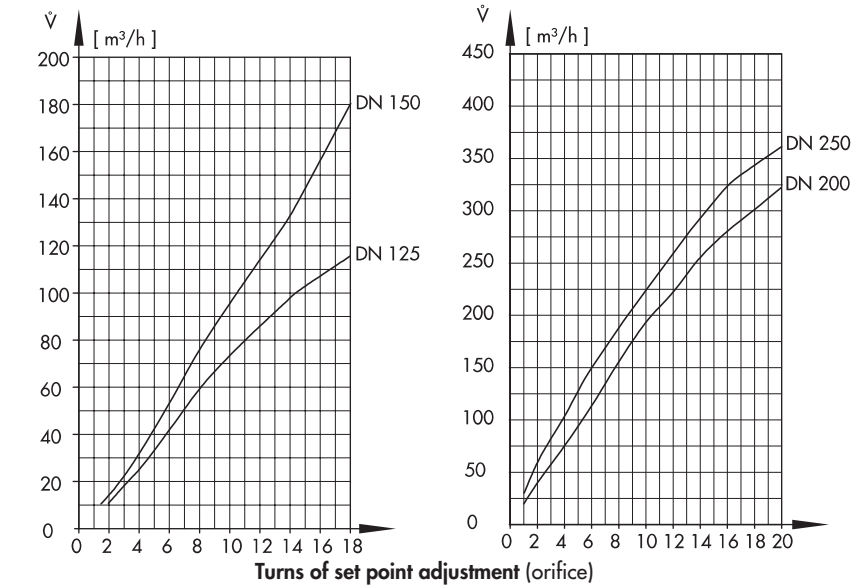


DN 125, DN 150 · A = 320 cm² · $\Delta p_{restriction}$ = 0.2 bar
Balanced by a diaphragm

DN 200, DN 250 · A = 320 cm² · $\Delta p_{restriction}$ = 0.2 bar
Balanced by a diaphragm

Adjustment diagrams valid for water

*Fig. 9 · Adjustment diagram for Type 2423* ***balanced by a diaphragm****, DN 125 to DN 250*

## 3.2.2 Set point for differential pressure

***Note:*** *Before adjusting the differential pressure, reduce the maximum flow rate by approximately 5 % by closing a shut-off valve on the consumer side or the bypass.*
*If a motorized valve is used in the plant, close this by approximately 10 % of its travel.*

Turn the nut (17) counterclockwise to unload the set point springs (16) and adjust the differential pressure set point. While doing this, compare the pressures upstream and downstream of the consumer by reading off the installed pressure gauges (see Fig. 3). If you want to adjust small differential pressure set points, we recommend using a differential pressure gauge instead of two pressure gauges.

- Turn the nut (17) clockwise to increase the set point.
- Turn the nut (17) counterclockwise to reduce the set point.

### 3.2.3 Pressure set point in Type 42- 39 Flow and Pressure Regulator

Adjust the pressure set point at the nut (17). While doing this, read the pressure off the installed pressure gauge on the downstream side .

- Turn the nut (17) clockwise to increase the downstream pressure.
- Turn the nut (17) counterclockwise to reduce the downstream pressure.

## 3.3 Decommissioning

Close the shut-off valves starting from the upstream side (high-pressure line).

---

***CAUTION!***
*On performing any work on the regulator, make sure the relevant section of the pipeline is depressurized and, depending on the process medium, drained as well.*
*For high temperatures, allow the regulator to cool down to ambient temperature before starting any work on it.*
*Interrupt or shut off the control line to avoid any hazards which could be caused by moving parts.*
*As valves are not free of cavities, remember that residual process medium might still be contained in the valve.*
*We recommend to remove the valve from the pipeline. Make sure that all the plant sections connected to the control lines are also depressurized. If this is not the case, shut off the control lines.*

---

# 4 Customer service

Should any malfunctions or any defect occur, SAMSON's After-Sales Service is prepared to help you on site.

You can also send the defective regulator directly to your local SAMSON representative for repair. Addresses of SAMSON subsidiaries, agencies and service centers are listed in the product catalogs and in the Internet at www.samson.de.

To allow SAMSON to find the fault and to have an idea of the installation situation, specify the following details (refer to the nameplate):

- Type and nominal size of the valve
- Threaded or flanged end connections
- Model number
- Upstream and downstream pressure
- Flow rate in $m^3/h$
- Has a strainer been installed?
- Sketch of the installation with exact position of regulator and all additional installed components (shut-off valves, pressure gauges, etc.).

# 5 Maintenance · Troubleshooting

The regulators are maintenance free. Nevertheless, they are subject to natural wear, particularly at the seat, plug and operating diaphragm. Depending on the operating conditions, the regulator needs to be checked at regular intervals to avoid possible malfunctions. Details on faults and the recommended action can be found in the table below.

**Table 2 · Troubleshooting**

| Malfunction | Possible reasons | Recommended action |
|---|---|---|
| Flow rate or differential pressure exceeds its set point | Seat and plug untight | Remove valve from pipeline. Clean seat and plug. Replace plug, if necessary. Otherwise send the regulator to SAMSON for repair. |
| | Operating diaphragm defective | Replace diaphragm or send the regulator to SAMSON for repair. |
| | Control line blocked | Remove control line and clean it. |
| | Valve too large for flow control or too small for differential pressure control | Recalculate $K_{VS}$ coefficient and contact SAMSON for further action. |
| Flow rate or differential pressure set point is not reached | Seat and plug untight | Remove valve from pipeline. Clean seat and plug. Replace plug, if necessary. Otherwise send the regulator to SAMSON for repair. |
| | Wrong set point range selected | Check set point range and contact SAMSON for further action. |
| | Safety equipment, e.g. pressure limiter, has been triggered | Check plant and unlock safety equipment. |
| | Insufficient pressure drop across the plant | Compare existing differential pressure in the plant with the plant's drag.<br>Differential pressure across the plant $\Delta p_{min} = \Delta p_{restriction} + (\dot{V} / K_{VS})^2$. |
| | Strainer blocked | Drain and clean filter of the strainer |
| | Direction of flow, valve incorrectly installed | Install the valve so that the direction of flow is the same as indicated by the arrow. |
| Control loop hunts | Valve too large for the control task at hand | Recalculate $K_{VS}$ coefficient. Contact SAMSON. |
| | Restriction (or needle valve) is missing in a control line to dampen pulsation | Check restriction in the connection to chamber D (Type 42-37) or chamber C (Type 42-39). If necessary, install a needle valve in the control line and start to close it until the control loop becomes stable.<br>**Caution!** Do not completely close needle valves. |

# 6 Nameplates

Valve and actuator both have a nameplate.

DIN version

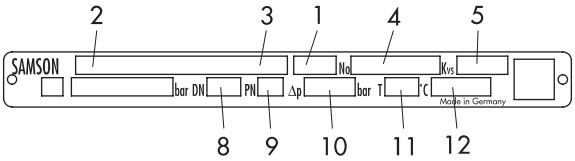


ANSI version

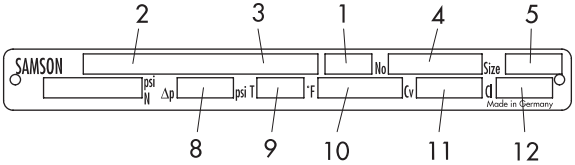


**Valve nameplates**

**Valve**

1 Valve type
2 Model number
3 Model number index
4 Order number or order date
5 $K_{VS}$ coefficient
8 Nominal size
9 Nominal pressure
10 Perm. differential pressure in bar
11 Perm. temperature in °C
12 Body material

ANSI version

5 Nominal size
8 Perm. differential pressure in psi
9 Perm. temperature in °F
10 Body material
11 Cv coefficient ($K_{VS}$ x 1.17)
12 ANSI Class (pressure rating)

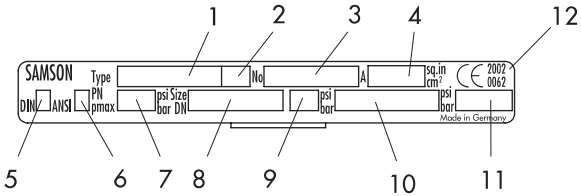


**Actuator nameplate**

Actuator

1 Model number
2 Model number index
3 Order number or order date
4 Effective diaphragm area
5 Labeling acc. to DIN
6 Labeling acc. to ANSI
7 Max. perm. pressure
8 Nominal size
9 Differential pressure at restriction
10 Set point range
11 Diaphragm material
12 Year of production

*Fig. 10 · Nameplates*

# 7 Technical data

## Table 3 · Technical data · Type 42-37 · Type 42-39

| Type 2423 Valve · Balanced by a bellows | | | |
|---|---|---|---|
| Nominal size | | DN 15 to DN 100 | DN 125 to DN 250 |
| Nominal pressure | | PN 16, 25 or 40 (acc. to DIN EN 12516-1) | |
| Pressure at which internal excess pressure limiter responds (Type 42-37 only) | 160 cm² | 1.2 bar | |
| | 320 cm² | 0.6 bar | |
| Max. perm. temperature | Valve body | See pressure-temperature diagram | |
| | Actuator [1] | With equalizing tank: Liquids up to 220 °C<br>Without equalizing tank: Liquids up to 150 °C | |
| Differential pressure or pressure set point | bar | 0.1 to 0.6 · 0.2 to 1 · 0.5 to 1.5 · 1 to 2.5 · 2 to 5<br>4.5 to 10 [2] | |
| Leakage rate | | ≤ 0.05 % of $K_{VS}$ coefficient | |

| Type 2423 Valve · Balanced by a diaphragm | | |
|---|---|---|
| Nominal size | | DN 125 to DN 250 |
| Nominal pressure | | PN 16, 25 or 40 (acc. to DIN EN 12516-1) |
| Pressure at which internal excess pressure limiter responds (Type 42-37 only) | 160 cm² | 1.2 bar |
| | 320 cm² | 0.6 bar |
| | 640 cm² | 0.3 bar |
| Max. perm. temperature | Valve body | See pressure-temperature diagram |
| | Actuator [1] | Liquids up to 150 °C |
| Differential pressure or pressure set point | | 0.1 to 0.6 bar · 0.2 to 1 bar · 0.5 to 1.5 bar · 1 to 2.5 bar<br>2 to 5 bar [2] |
| Leakage rate | | ≤ 0.05 % of $K_{VS}$ coefficient |

[1] Higher temperatures possible on request

[2] On request

# 8 Dimensions

## Dimensional drawing · Type 2423 Valve balanced by a diaphragm

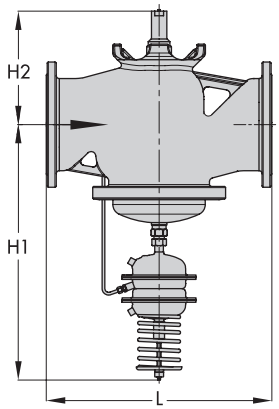


Type 42-37/Type 42-39

*Fig. 11 · Dimensions of Type 2423 Valve balanced by a diaphragm*

**Table 4** · Dimensions in mm and weights in kg · Type 2423 Valve balanced by a diaphragm

| **Type 2423 Valve balanced by a diaphragm** | | | | |
|---|---|---|---|---|
| **Nominal size** | **DN 125** | **DN 150** | **DN 200** | **DN 250** |
| Length L | 400 | 480 | 600 | 730 |
| Height H1 | 910 | 935 | 1020 | |
| Height H2 | 295 | 325 | 345 | 375 |
| **Weight for PN 16 [1] in kg** | | | | |
| Type 2423 Valve | 65 | 85 | 248 | 268 |
| Type 2427/2429 Actuator | 32 | 32 | 35 | 35 |

[1] PN 25/40: +10 %

## Dimensional drawing · Type 2423 Valve balanced by a bellows

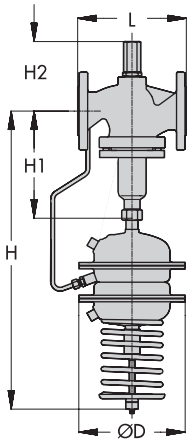


Type 42-37/Type 42-39

*Fig. 12 · Dimensions of Type 2423 Valve balanced by a bellows*

**Table 5** · Dimensions in mm and weights in kg · Type 2423 Valve balanced by a bellows

| Type 2423 Valve balanced by a bellows | | | | | | | | | | | | | | | |
|---|---|---|---|---|---|---|---|---|---|---|---|---|---|---|---|
| **Nominal size DN** | | | **15** | **20** | **25** | **32** | **40** | **50** | **65** | **80** | **100** | **125** | **150** | **200** | **250** |
| Length L | | | 130 | 150 | 160 | 180 | 200 | 230 | 290 | 310 | 350 | 400 | 480 | 600 | 730 |
| Height H1 | | | 225 | | | | | | 300 | | 355 | 460 | 590 | 730 | |
| Height H2 | | Other materials | 115 | | | 150 | | | 175 | 180 | 200 | 250 | 280 | 400 | |
| | | 1.4571 | 113 | – | 130 | – | 170 | 176 | – | | | | | | |
| Set point range | 0.1 to 0.6 bar | Height H [1] | 675 | | | | | | 790 | | 845 | – | | | |
| | | Actuator | Ø D = 225 mm, A = 160 cm² | | | | | | Ø D = 285 mm, A = 320 cm² | | | – | | | |
| | | Weight [2] | 20.5 | 21 | 22 | 28.5 | 29 | 31.5 | 51 | 56 | 71 | – | | | |
| | 0.2 to 1 bar | Height H [1] | 675 | | | | | | 770 | | 825 | 1130 | 1160 | 1240 | |
| | | Actuator | Ø D = 225 mm, A = 160 cm² [4] | | | | | | | | | Ø D = 285 mm, A = 320 cm² | | | |
| | | Weight [2] | 20.5 | 21 | 22 | 28.5 | 29 | 31.5 | 43 | 48 | 65 | 130 | 180 | 420 | 480 |
| | 0.5 to 1.5 bar | Height H [1] | 675 | | | | | | 770 | | 825 | 1130 | 1160 | 1240 | |
| | | Actuator | Ø D = 225 mm, A = 160 cm² [4] | | | | | | | | | Ø D = 285 mm, A = 320 cm² | | | |
| | | Weight [2] | 20.5 | 21 | 22 | 28.5 | 29 | 31.5 | 43 | 48 | 65 | 135 | 185 | 425 | 485 |
| | 1 to 2.5 bar | Height H [1] | 675 | | | | | | 770 | | 825 | 1130 | 1160 | 1240 | |
| | | Actuator | Ø D = 225 mm, A = 160 cm² | | | | | | | | | Ø D = 285 mm, A = 320 cm² | | | |
| | | Weight [2] | 20.5 | 21 | 22 | 28.5 | 29 | 31.5 | 43 | 48 | 65 | 135 | 185 | 425 | 485 |
| | 2 to 5 bar | Height H [1] | 615 | | | | | | 690 | | 745 | – | | | |
| | | Actuator | Ø D = 225 mm, A = 160 cm² | | | | | | | | | – | | | |
| | | Weight [2] | 20.5 | 21 | 22 | 28.5 | 29 | 31.5 | 43 | 48 | 65 | – | | | |

1) Add 50 mm to height H for Type 42-39
2) The weight applies to the version with material specifications EN-JL 1040/PN 16.
Add 10 % to this weight for versions made of cast steel 1.0619/PN 40, spheroidal graphite iron EN-JS 1049/PN 25 and 1.4581/1.4571.
3) $\Delta p$ = 4.5 bar to 10 bar on request
4) Optionally also with actuator 320 cm² (DN 65 to 100).We recommend actuator 320 cm² for regulators with double adapter (see T 3019 EN) in sizes DN 65 to DN 100.

SAMSON AG · MESS- UND REGELTECHNIK
Weismüllerstraße 3 · 60314 Frankfurt am Main · Germany
Phone: +49 69 4009-0 · Fax: +49 69 4009-1507
Internet: http://www.samson.de

**EB 3017 EN**

S/Z 2008-09