Self-operated Temperature Regulators

Temperature Regulator Type 4 u

with balanced single-seated globe valve

Application

Temperature regulator for cooling installations with control thermostats for **set points** from **–10 °C** to **+250 °C** · **Nominal sizes DN 15** to **DN 250** · **Nominal pressures PN 16** to **PN 40** · For temperatures up to **350 °C**
The valve opens when the temperature rises.

The regulators consist of a balanced valve with a reversing device and a control thermostat, comprising a temperature sensor, a set point adjustment head with an excess temperature safety device, a capillary tube and an operating element.

Special features

– Low-maintenance P regulators requiring no auxiliary energy
– Wide set point range and easy adjustment of the set point indicated on a dial
– Single-seated globe valves with plug balancing by means of a stainless steel bellows, applicable for liquids, gases and vapors, especially for coolants such as cooling water and cooling brine
– Valve body optionally made of cast iron, spheroidal graphite iron, cast steel or stainless cast steel

Fig. 1 · Type 4 u Temperature Regulator with Type 2231 Thermostat

Versions

Temperature Regulator Type 4 u · With Type 2114 Valve for DN 15 to DN 250 · PN 16 to PN 40 · Reversing device and Type 2231 to Type 2234 Control Thermostats.

For details on the application of the thermostats, see Information Sheet T 2010 EN.

Type 2114/2231 (Fig. 1) · With Type 2114 Valve and Type 2231 Control Thermostat for liquids · Set points from –10 to +150 °C, set point adjustment at the sensor

Type 2114/2232 (Fig. 2) · With Type 2114 Valve and Type 2232 Control Thermostat for liquids and steam · Set points from –10 to +250 °C, separate set point adjustment

Type 2114/2233 · With Type 2114 Valve and Type 2233 Control Thermostat for liquids, air and other gases · Set points from –10 to +150 °C , set point adjustment at the sensor

Type 2114/2234 · With Type 2114 Valve and Type 2234 Control Thermostat for liquids, air and other gases · Set points from –10 to +250 °C, separate set point adjustment.

For valve versions with a plug balanced by a diaphragm, see Data Sheet T 2650 EN.

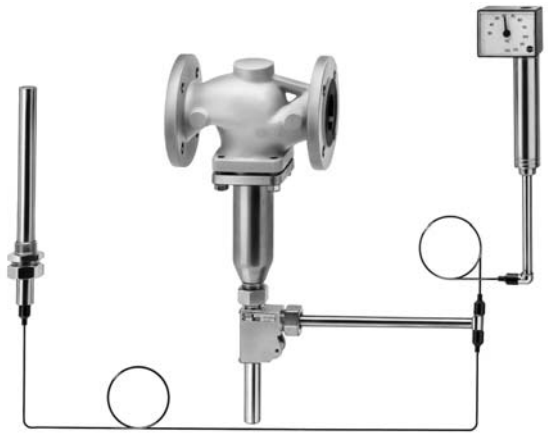

Fig 2 · Type 4 u Temperature Regulator with Type 2232 Thermostat, version with separate set point adjustment

Special version
– Capillary tube of either 5 m, 10 m or 15 m
– Sensor made of CrNiMo steel
– Capillary tube made of CrNiMo steel/Cu, plastic-coated
– Valve completely made of stainless steel
– Reduced K_{VS} value
– Version with reversing device with travel adjuster (for adjustment of minimum flow rate)
– ANSI version

Principle of operation (Fig. 3)
The regulators operate according to the liquid expansion principle. The temperature sensor (13), capillary tube (10) and operating element (8) are filled with an expansion liquid. The temperature-dependent change in volume of this liquid causes the operating element (8) to move and, as a result, also moves the plug stem (5) of the valve with the attached plug (3).
The position of the plug determines the flow rate of the heat transfer medium across the area released between the seat (2) and plug.
The set point is adjustable with a key (11) to a value which can be read off from a dial (12).

Valve
1 Valve body
2 Seat (exchangeable)
3 Plug
4 Bellows housing
4.1 Balancing bellows
5 Plug stem with spring
6 Coupling nut

Control thermostat
7 Reversing device
8 Operating element with bellows
9 Pin of operating element
10 Capillary tube
11 Key for set point adjustment
12 Set point dial
13 Temperature sensor

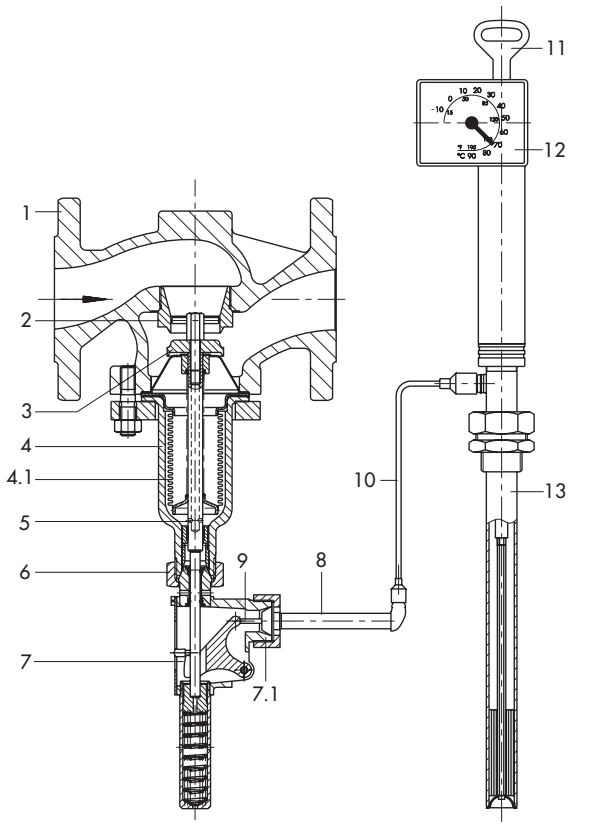

Fig. 3 · Type 4 u Regulator with Type 2231 Control Thermostat

Table 1 · Technical data · All pressures in bar (gauge). The permissible pressures and differential pressures specified are limited by the values given in the pressure-temperature diagram and the nominal pressure ratings.

Type 2114 Valve	**Nominal pressure**	**PN 16 to PN 40**												
K_{VS} values, leakage rate and maximum permissible differential pressure Δp[1] in bar														
Standard version	Connection DN	15	20	25	32	40	50	65	80	100	125	150	200	250
K_{VS} value		4	6.3	8	16	20	32	50	80	125	190	280	420	500
Leakage rate		≤ 0.05% of K_{VS} value												
Differential pressure Δp in bar		25						20		16		12	10	
Special version	Connection DN	15	20	25	32	40	50	65	80	100	125	150	200	250
K_{VS}		2.5; 4; 6.3			6.3	8	16	20	32	50	–	–	–	–
Differential pressure		25								16	–			
Permissible valve temperature		See pressure-temperature diagram												

Type 2231 to **Type 2234 Thermostats**		**Size 150**	**Size 250** [2]
Set point range (set point range, each 100 K)		–10 to +90 °C, 20 to 120 °C or 50 to150 °C or 150 to 250 °C	0 to 70, 30 to 100, 50 to 120 80 to 150 °C
Perm. ambient temperature at the set point adjustment head		–40 to +80 °C	–20 to +80 °C
Perm. temperature at the sensor		100 K above the adjusted set point	30 K above adj. set point
Perm. pressure at the sensor	Types 2231/2232	Without thermowell: PN 40, with thermowell: PN 40 or PN 100 (version of copper PN 16) With thermowell with flange: PN 40/DN 32 or PN 100/DN 40	PN 16 [3]
	Types 2233/2234	With flange: PN 6 (140 external Ø) or PN 40/DN 32	
Length of capillary tube		3 m (special version: 5, 10 or 15 m)	

[1] For liquids, the differential pressure equals the pressure head of the pump [2] Only Type 2231 and Type 2232
[3] Version with flange or other nominal pressures on request

Table 2 · **Materials** · Material numbers according to DIN EN

Type 2114 Valve				
Connection	**DN 15** to **250**			
Nominal pressure	PN 16	PN 16 · PN 25 [1]	PN 25 · PN 40	
Body	Cast iron EN-JL1040 (GG-25)	Spheroidal graphite iron EN-JS1049 (GGG-40.3)	Cast steel [2] 1.0619 (GS-C 25)	Stainless cast steel [2] 1.4581
Seat and plug [3]	Steel 1.4006 (1.4301 for DN 125 to 250)			1.4571
Plug stem/spring	1.4301/1.4310			
Balancing bellows	Stainless steel 1.4571			
Bellows housing	1.0425 (St 35.8)			1.4571
Body gasket	Graphite on metal core			
Reversing device	Brass CC754S (casted brass, Gk-Br60)			
Distance piece	Brass (special version: stainless steel 1.4301)			1.4301

Type 2231, 2232, 2233, 2234 and 2235 Thermostats			
	Standard version	Special version	
Operating element	Brass, nickel-plated		
Types 2231/2 SensorTypes 2233/4 Type 2235	Bronze, nickel-plated Copper, nickel-plated Copper	–	Stainless steel 1.4571
Capillary tube	Copper, nickel-plated	Copper, plastic-coated	
Thermowell with threaded connection			
Immersion tube	Bronze, nickel-plated	Copper	1.4571
Threaded nipple	Brass, nickel-plated	Copper	1.4571
... with flange			
Immersion tube	Steel	Plastic-coated or PTFE [4]	1.4571
Flange	Steel		1.4571

[1] Max. DN 150 · PN 25: to DN 150 · PN 16: DN 100 to 150
[2] PN 25: DN 200 to DN 250; PN 16: DN 100 to DN 250
[3] Optionally soft-sealing plug with PTFE ring for temperatures up to 220 °C or with EPDM ring for temperatures up to 150 °C
[4] Plastic coating - for temperatures up to 80 °C - PVC or PPH coating

Flow diagram for water

The values shown apply for a fully opened valve.

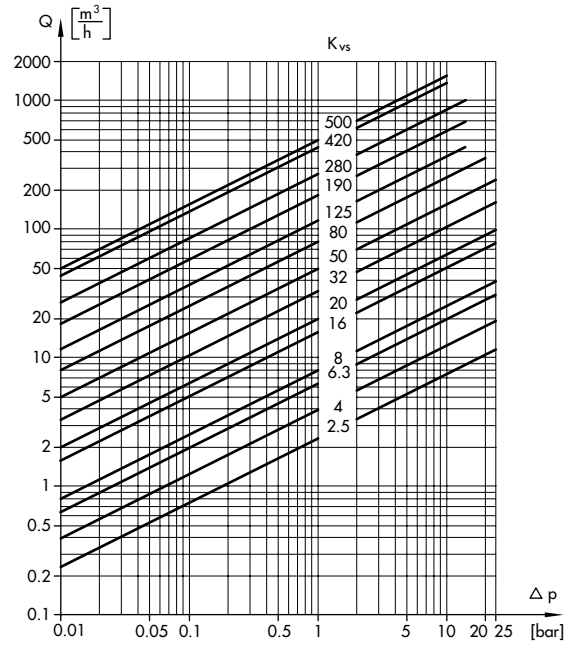

Valve sizing for other media acc. to DIN EN 60534-2-1, using the terms: F_L = 0.95 and X_T = 0.75

Fig. 4 · Flow diagram for water

Pressure-temperature diagram · acc. to DIN EN 12516-1

The stated operating pressures are limited by the specifications in the pressure-temperature diagram.

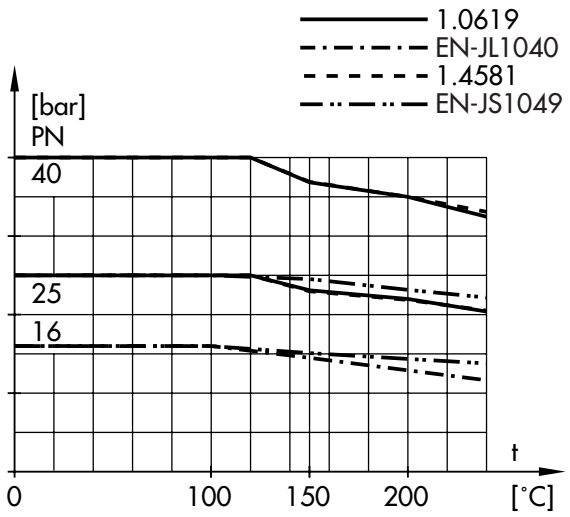

Fig. 5 · Pressure-temperature diagram

Accessories

For Types 2231 and 2232 Control Thermostats: thermowells with threaded connection or flange:

Threaded connection G 1 optionally made of:

- Bronze PN 40
- Steel PN 40
- CrNiMo steel PN 40

Flanges DN 32 optionally:

- Steel PN 40
- CrNiMo steel PN 40
- With immersion tube of lead/PTFE/diabon/titanium/steel
- With PVC/PPM coating

Thermowell for flammable gases typetested by DVGW (German Technical and Scientific Association on Gas and Water), threaded connection G1, PN 100

For Types 2233 and 2234 Control Thermostats:

Clamps and perforated cover for wall mounting

Flange optionally made of:

- Steel PN 6, hole circle 110 mm
- Steel PN 40, DN 32
- CrNiMo steel /DN 65 etc.

Distance piece: To protect the operating element from inadmissible operating conditions, a distance piece is to be installed between the valve and the operating element.

In the stainless steel version, the distance piece is used to separate the non-ferrous metal parts of the operating element from the medium flowing through the valve. In addition, it prevents the medium from leaking when the thermostat is exchanged. Optionally made of:

- Brass (for water, steam)
- CrNi steel (for water or oil)

Double adapter

- Type Do1 for connection of a second thermostat
- Type DoS with electric signal transmitter

Dynamic behavior of the thermostats

The dynamics of the regulator are mainly determined by the response of the sensor with its characteristic time constant.

Table 3 (below) lists the response times of SAMSON sensors operating on different principles when tested in water.

Table 3 · Dynamic response of SAMSON thermostats

Functioning principle	Type... Control Thermostat	Time constant in seconds	
		Without thermowell	With thermowell
Liquid expansion	2231	70	120
	2232	65	110
	2233	25	–[1)]
	2234	15	–[1)]
	2235	10	–[1)]
	2213	70	120
Adsorption	2212	–[1)]	40

[1)] Not permissible

Installation

Valves

The valves are to be installed in horizontal pipelines with the operating element vertically suspended. The medium flows through the valve in the direction indicated by the arrow on the body.
Other mounting positions are possible on request.

Capillary tube

The capillary tube must be installed in such a way that it is not exposed to large temperature fluctuations (ambient temperature approx. +20 °C) and cannot be damaged. The smallest permissible bending radius is 50 mm.

Temperature sensor

The temperature sensor may be installed in any desired position. Its whole length must be immersed in the medium to be controlled. Choose a place of installation where neither overheating nor considerable idle times occur.

Only use the same kind of materials together, for example thermowells made of stainless steel 1.4571 can be installed in stainless steel heat exchangers.

Table 4 · Dimensions in mm and weights in kg

Type 2114 Valve DN	15	20	25	32	40	50	65	80	100	125	150	200 [2]	250 [2]
Length L	130	150	160	180	200	230	290	310	350	400	480	600	730
H1	225						300		355	460	590	730	
H	515						545		570	675	910	1050	
Weight (body PN 16) [1] approx. kg	5	5.5	6.5	13	13.5	16	27	32	40	70	113	255	300

Thermostat **Type**	2231	2231/32 size 250	2232	2233	2234
Immersion depth T	290 [3]	~980	235 [3]	430	460
Weight approx. kg	3.2	6.5	4.0	3.4	3.7

[1] +15% for PN 25/40 [2] Only in combination with Types 2231/2232 Thermostats in size 250 [3] Larger immersion depths are available on request.

Dimensions

Type 2114 Type 2231/2233

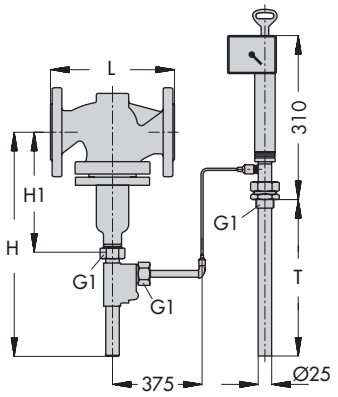

Type 2232/2234

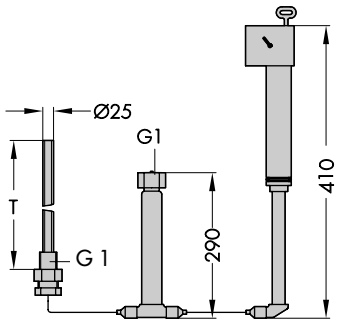

With separate set point adjustment

Thermowells for Type 2231/2232

Thermostat **Type**	2231	2231/32 size 250	2232
Imm. depth T **mm**	325	~995	250

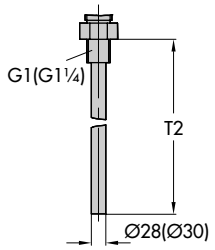

Threaded connection

G1/PN 40 or PN 100
(version of copper PN 16)
Dimensions for PN 100 in ()

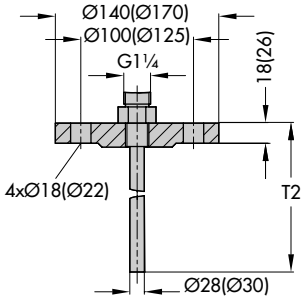

Flanges

DN 32/PN 40
DN 40/PN 100
(dimensions in parentheses)

Clamps and perforated cover for wall mounting

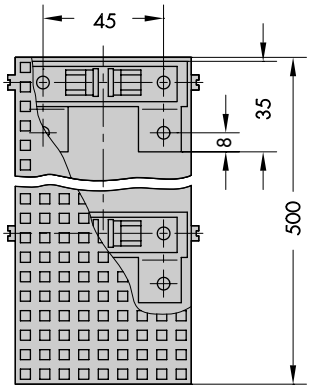

Distance piece
(Weight approx. 0.2 kg)

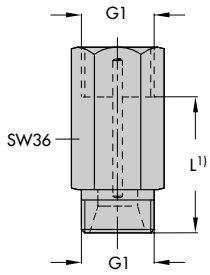

[1] L = 55 mm

If a distance piece is used, the overall heights are: H1 + 55 mm and H + 55 mm.

Thermowell for flammable gases (G1/PN 100)

Control Thermostat	**Type 2231**	**Type 2232**
Length L1 in mm	315	255
Length L2 in mm	340	280

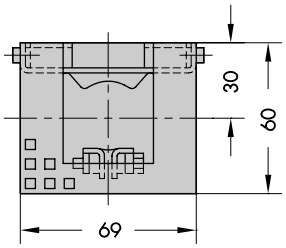

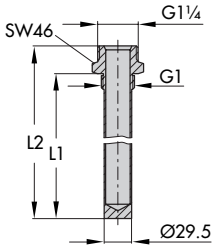

Flange for Types 2233 and 2234

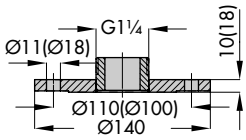

Flange PN 6; 140 external ∅

Flange PN 40/DN 32
(dimensions in parentheses)

Fig. 6 · Dimensions in mm

Ordering text

Temperature Regulator Type 4 u/...

DN ..., PN ...
Body material ...
with Thermostat Type ...
Set point range ... °C
Length of capillary tube ... m
Optional: special version ..., accessories ...

Specifications subject to change without notice.

SAMSON AG · MESS- UND REGELTECHNIK
Weismüllerstraße 3 · 60314 Frankfurt am Main · Germany
Phone: +49 69 4009-0 · Fax: +49 69 4009-1507
Internet: http://www.samson.de