Self-operated Regulators Series 45

Differential Pressure Regulators with closing actuator

Type 45-1 · Type 45-2 · For installation in flow pipes

Type 45-3 · Type 45-4 · For installation in return flow pipes

Application

Differential pressure regulators for use in district heating supply plants, extended pipelines and industrial plants.

Differential pressure set points (Δp) from **0.1** to **10 bar** · Valve sizes **DN 15** to **DN 50** · Nominal pressure **PN 16/25** · Suitable for liquids up to **150 °C** and gases up to **80 °C**

The valve **closes** when the differential pressures increases.

The differential pressure regulators consist of a valve and an actuator. They control the differential pressure to the adjusted set point.

Special features

- Low-maintenance proportional regulators requiring no auxiliary energy
- Only one control line needs to be installed on mounting the regulator since each regulator has its own permanent connection to the actuator
- Suitable for water and other liquids or gases, provided these do not cause the materials used to corrode
- Special version for oil
- Single-seated valve with a plug balanced by a piston
- Especially designed for district heating systems conforming to DIN 4747 (requirements stipulated by the German district heating association (AGFW) for components in house substations)

Versions (Figs. 1 to 3)

Differential pressure regulator with closing actuator · Valves DN 15 to DN 50 made of red casting brass with welding ends (special versions with threaded ends or flanges) · Plug balanced by a piston · Nominal sizes DN 32, 40 and 50 also available with flanged valve body made of spheroidal graphite iron

Differential pressure regulators for installation in high-pressure pipes, e.g. in flow pipes

Type 45-1 · Set point fixed at 0.1, 0.2, 0.3, 0.4 or 0.5 bar

Type 45-2 · Set point adjustable within the range of 0.1 to 4 bar · With set point indication (DN 15, 20, 25 and 32 only; set point 0.1 to 0.5 bar and 0.1 to 1 bar)

Differential pressure regulators for installation in low-pressure pipes, e.g. in return flow pipes

Type 45-3 (Fig. 1) · Set point fixed at 0.1, 0.2, 0.3, 0.4 or 0.5 bar · With internal overload protection in the actuator

Type 45-4 (Fig. 2) · Set point adjustable within the range 0.1 to 4 bar · With set point indication (DN 15, 20, 25 and 32 only; set point 0.1 to 0.5 bar and 0.1 to 1 bar) · With internal overload protection (excess pressure limiter) in the actuator

Fig. 1 · Type 45-3 Differential Pressure Regulator

Fig. 2 · Type 45-4 Differential Pressure Regulator

Special version

– Special K_{VS} with DN 15 version
– With oil-resistant internal parts (with PN 25 only)

Combinations with other devices from SAMSON on request
ANSI versions available on request

Associated Information Sheet	**T 3120 EN**	**Edition July 2006**	
Associated Data Sheet for accessories	**T 3095 EN**	**Data Sheet**	**T 3124 EN**

Principle of operation

The medium flows through the valve (1) in the direction indicated by the arrow. The position of the valve plug (3) determines the differential pressure Δp over the cross-sectional area released between the plug and seat (2).
The differential pressure to be controlled is transferred to the operating diaphragm (7) where it is transformed into a positioning force. The valves have a balanced plug (3) to eliminate the forces at the valve plug caused by the differential pressure.

In **Types 45-1** and **45-2**, the pressure in the valve outlet (high pressure) acts on the high-pressure chamber of the operating diaphragm (7) over the attached control line (11). The low pressure (return flow pipe) is transferred to the other side of the operating diaphragm over the external control line (11.1). The regulators are designed for installation in high-pressure pipes.

In **Types 45-3** and **45-4**, the pressure in the valve inlet (low pressure) acts on the low-pressure chamber of the operating diaphragm (7) via a hole (12) in the valve body (1). The high pressure (flow pipe) is transferred to the bottom diaphragm chamber over the external control line (11.1). The regulators are designed for installation in low-pressure pipes.
The set point springs (5) installed in the valves of **Type 45-1** and **Type 45-3** determine the set point. The set point of **Type 45-2** and **Type 45-4** is adjustable and can be lead-sealed at the set point adjuster (10). The resulting positioning force in all regulators moves the valve plug depending on the fixed or adjustable set point.
Type 45-3 and **Type 45-4** feature an overload protection (excess pressure limiter) (13) in the actuator protects seat and plug from overload during exceptional operating conditions that could lead to valve or plant damage.

Regulators for installation in high-pressure pipes

Regulators for installation in low-pressure pipes

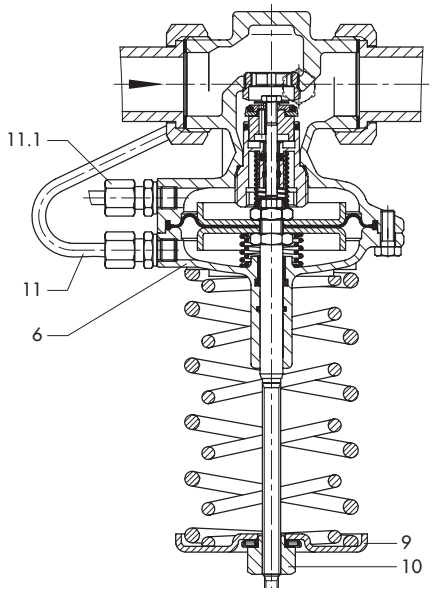

Type 45-2 · Standard version
(0.5 to 2.0 bar/1.0 to 4.0 bar)

1 Valve body
1.1 Connection nut with seal and welding end
1.2 Flanged body
2 Seat
3 Piston plug
4 Plug stem
5 Set point spring (fixed set point)
6 Actuator
7 Operating diaphragm
8 Set point spring (adjustable set point)
9 Spring plate
10 Set point adjuster
11 Control line for Type 45-1 and Type 45-2
11.1 External control line
12 Hole for low pressure in Type 45-3 and Type 45-4
13 Internal excess pressure limiter (overload protection) Type 45-3, Type 45-4

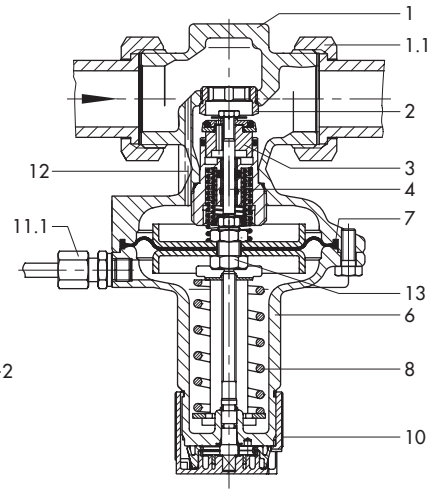

Type 45-4 · Standard version
(DN 15 to DN 32/
0.1 to 0.5 bar and 0.1 to 1.0 bar) with
set point indication and set point adjuster

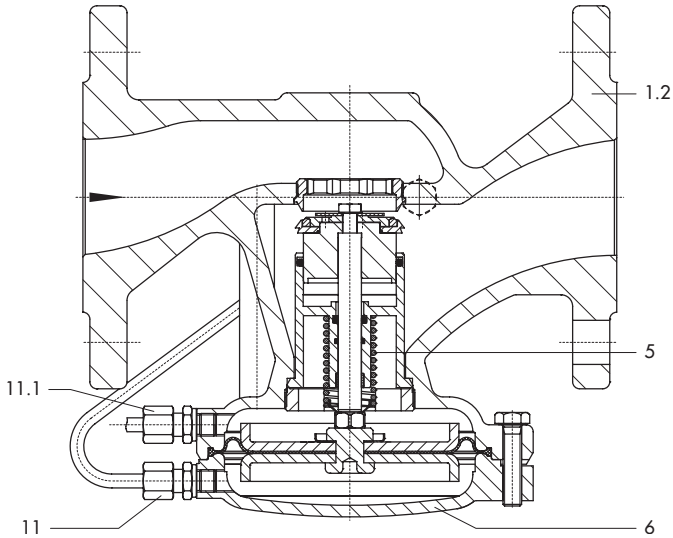

Type 45-1 · Version with flanged valve body (DN 32, 40 and 50)

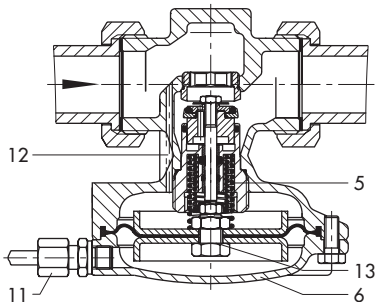

Type 45-3 · Standard version

Fig. 3 · Sectional views of the differential pressure regulators

Table 1 · Technical data

Nominal size DN		**15**	**20**	**25**	**32** [1]	**40** [1]	**50** [1]
K_{VS}		2.5	6.3	8	12.5	16	20
Special versions		0.4 · 1 · 4	–				
Flanged body		–			12.5	20	25
z value	Standard	0.6		0.55	0.55		0.45
	Flanged body	–			0.45		0.4
Nominal pressure Type 45-2 · Type 45-4		PN 25					
Type 45-1 · Type 45-3		PN 25/PN 16			PN 25		
Max. perm. differential pressure Δp at the valve		20/10 bar[2]				16 bar	
Max. perm. temperature		Liquids: 150 °C/130 °C [2] · Non-flammable gases: 80 °C					
Pressure above adjusted set point at which internal excess pressure limiter responds (Types 45-3 and 45-4)		0.5 bar					
Differential pressure set point ranges							
Type 45-1, Type 45-3 fixed		0.1 · 0.2 · 0.3 · 0.4 · 0.5 bar					
Type 45-2, Type 45-4 continuously adjustable		0.1 to 1 bar · 0.1 to 0.5 bar				0.2 to 1 bar	
		0.5 to 2 bar · 1 to 4 bar					

[1] Additional version: Valve with flanged body made of spheroidal graphite iron (EN-JS 1049)

[2] For PN 16 version

Table 2 · Materials · Material number acc. to DIN EN

Valve body		**Red brass CC491K** (G-CuSn5ZnPb, Rg 5) · **Spheroidal graphite iron EN-JS 1049** [1]
Seat		Stainless steel 1.4305
Plug	PN 25	Brass (free of dezincification) with EPDM soft sealing [2]
	PN 16	Brass (free of dezincification) with EPDM soft sealing [2]
Valve springs		Stainless steel 1.4310
Operating diaphragm		EPDM with fabric reinforcement [2]
Seal rings		EPDM [2]

[1] Additional version for DN 32, 40 and 50: Valve with flanged body made of spheroidal graphite iron

[2] Special version for oils (ASTM I, II, III): FPM (FKM)

Application

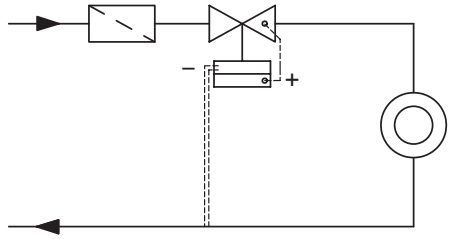

Differential pressure control with Types 45-1/45-2, installation in high-pressure pipe

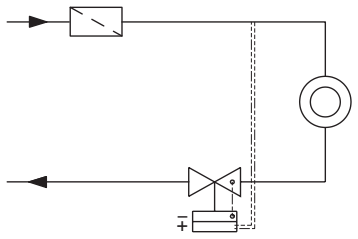

Differential pressure control with Types 45-3/45-4, installation in low-pressure pipe

- - - - Permanent connection to actuator
= = = To be attached on installing the regulator in the pipeline

Fig. 4 · Typical applications

Installation

The regulator is suitable for installation in horizontal pipes as well as vertical pipes.

Regulators in sizes DN 32 or larger may only be installed horizontal pipes with the actuator pointing downwards.

The following points must be observed:

- The medium must flow through the valve in the direction indicated by the arrow on the valve body.
- If possible, install a strainer (e.g. SAMSON Type 1NI) upstream of the valve.

Further details can be found in EB 3124 EN.

Pressure-temperature diagram – acc. to DIN EN 12516-1 –

The range of application, the permissible pressures and temperatures are limited by the specifications in the pressure-temperature diagram and the pressure ratings.

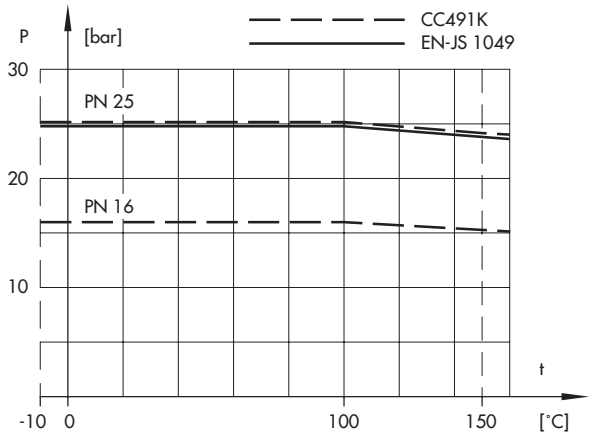

Fig. 5 · Pressure-temperature diagram

Flow rate diagram for water

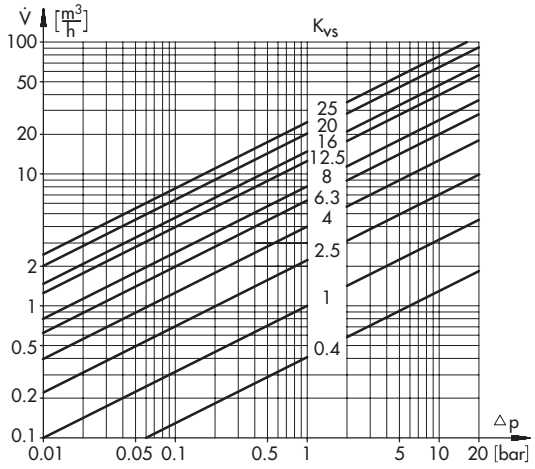

Fig. 6 · Flow rate diagram

Dimensions

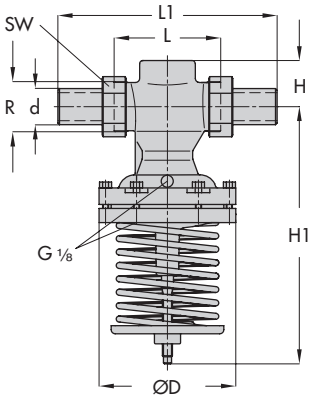

Types 45-2 and 45-4 [1], DN 15 to 32
0.5 to 2 bar and 1 to 4 bar
DN 40/50, all set point ranges

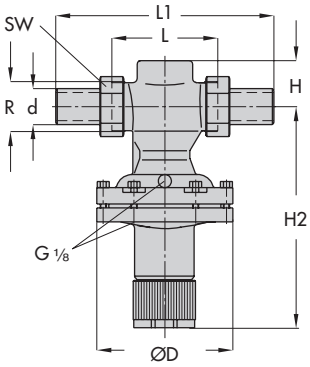

Types 45-2 and 45-4 [1], DN 15 to 32
0.1 to 0.5 bar and 0.1 to 1 bar

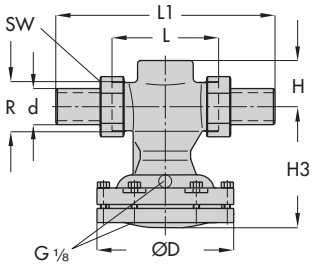

Type 45-1, Type 45-3 [1]

[1] Type 45-4 (45-3) same as Type 45-2 (45-1), except connection G ⅛ on diaphragm case

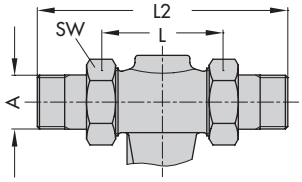

Connection nuts with threaded ends

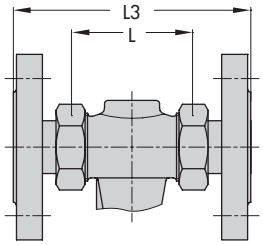

Connection nuts with flanges

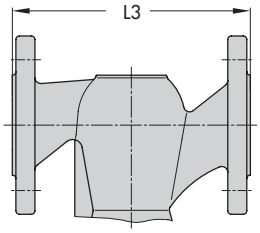

Flanged body (DN 32, 40 and 50)

Dimensions in mm · Standard version

Nominal size DN	15	20	25	32 [1]	40 [1]	50 [1]
Pipe Ø d	21.3	26.8	32.7	42	48	60
Connection R	G ¾	G 1	G 1¼	G 1¾	G 2	G 2½
Width across flats SW	30	36	46	59	65	82
Length L	65	70	75	100	110	130
Height H	32			45		
Height H1	230			250	380	
Height H2	160			180	–	
Height H3	85			105	140	
Ø D	116				160	

[1] Additional version: Valve with flanged body

The dimensions and weights of valves with flanged bodies (DN 32, 40 und 50) are the same as valves with screwed-on flanges.

Dimensions in mm and weights in kg · Incl. connecting parts

Nominal size DN		15	20	25	32	40	50
With welding ends							
Length L1		210	234	244	268	294	330
Weight, approx. kg	45-2/-4	2.0	2.1	2.2	8.5	9	9.5
	45-1/-3	1.5	1.6	1.8	4.8	5.3	6.0
With threaded ends							
Length L2		129	144	159	180	196	228
Male thread A		G ½	G ¾	G 1	G 1¼	G 1½	G 2
Weight, approx. kg	45-2/-4	2.0	2.1	2.2	8.5	9.0	9.5
	45-1/-3	1.5	1.6	1.8	4.8	5.3	5.8
With flanges [1] [2] or with flanged body (DN 32 to DN 50)							
Length L3		130	150	160	180	200	230
Weight, approx. kg	45-2/-4	3.4	4.1	4.7	11.7	13.0	14.5
	45-1/-3	2.9	3.6	4.3	8	9.3	10.8

[1] PN 16/25

[2] Valves in DN 40 and 50 already have flanges mounted

Fig. 7 · Dimensions

Ordering text

Type 45-1/ 45-2/ 45-3/ 45-4 Differential Pressure Regulator
DN ..., PN …
Permissible temperature ... °C, K_{VS} …
Connection nuts with welding ends/threaded ends/flanges/ flanged valve body in DN 32, 40 and 50
Set point/set point range … bar
On option, special version …

Specifications subject to change without notice.

SAMSON AG · MESS- UND REGELTECHNIK
Weismüllerstraße 3 · 60314 Frankfurt am Main · Germany
Phone: +49 69 4009-0 · Fax: +49 69 4009-1507
Internet: http://www.samson.de