Series 6495

TROVIS 6495-2 Industrial Controller

For panel mounting (front frame 96 x 96 mm/3.78 x 3.78 inch)

Application

Digital controller to automate industrial and process plants for general and more complex control tasks · Suitable for control of continuous, on/off or pulsing final control elements (pneumatic actuators with i/p positioners, electric actuators, electric heating systems, refrigerating machines etc.)

The TROVIS 6495-2 Industrial Controller has two independent internal controllers with common input and output sections.

By setting the configuration items and parameters, the controller can be adapted to a control task quickly. Preset basic configurations for each control type minimize setup work for standard applications. The controller can be set up directly at the controller or using the optional TROVIS-VIEW software.

The controller settings are saved in a non-volatile memory, even when the power supply fails. The two internal controllers can be operated directly without switching over. The plain-text display (German, English, French) facilitates configuration and parameterization.

Special features

- Simple menu structure with plain text readings
- Four analog inputs with filtering, root extraction and function generation as well as measuring range monitoring
- Four digital inputs for set point switchover, constant output value, reversal of operating action, output tracking (DDC backup), ramps etc.
- Three analog outputs
- Four relay outputs for two on-off/three-step outputs or limit alarms
- Two transistor outputs for status alarms
- One transistor output for fault alarms
- Optional RS-232/USB and RS-485 Modbus RTU/USB interface boards for SSP and Modbus RTU
- Degree of protection (front) IP 65
- Plug-on screw terminals
- Fixed set point control, one or two channels, internal/external switchover
- Follow-up control, one or two channels, internal/external switchover
- Ratio control
- Cascade control, consisting of master and slave controller
- Override control
- Mixing control
- Linking of input variables (addition, subtraction, multiplication, division, mean value, minimum and maximum selection) for feedforward control or control with max. four input variables (multi-component control)

TROVIS® Electronics from SAMSON

Fig. 1 · TROVIS 6495-2 Industrial Controller

- Operation with max. four internal set points and one external set point, either analog or over interface (SPC mode)
- Set point ramp and output ramp
- Split-range operation
- Control mode switchover P/PI or PD/PID
- KP or TN adapted using the controlled variable, reference variable, manipulated variable or error
- Adjustable limitation of integral-action component
- Operating point determined by set point or digital input
- Control signal limitation (fixed or floating according to input variable)
- Operation with key number or key locking over the digital input

Edition December 2009

Data Sheet **T 6495-2 EN**

Inputs and outputs (Fig. 3)

- **Four analog inputs** (AI 1 to AI 4) · DIP switches at the side of the case are used to initially select current or resistance inputs. The signal type is set depending on the configuration: 0 (4) to 20 mA, 0 (2) to 10 V, Pt 100, Pt 1000; input 2 additionally for potentiometer.
- **Four digital inputs** (DI 1 to DI 4) · The digital inputs are controlled either by a 24 V DC voltage signal or by the transmitter supply using a floating contact. The digital outputs can only be controlled in groups, with DI 1 and DI 2 being the first group, and DI 3 and DI 4 being the second group.
  Example: internal supply for digital inputs DI 1 and DI 2, and external supply for digital inputs DI 3 and DI 4.
- **Three analog outputs** (AO1 to AO3) · The signal type is set depending on the configuration: 0 (4) to 20 mA, 0 (2) to 10 V. Outputs AO1 and AO3 can optionally be used for other signals as well.
- **Seven digital outputs** · Four relay and three transistor outputs
  The relay outputs can be used to implement on/off, three-step (SO1 and SO2) or limit outputs (DO 1 to DO 4). The transistor outputs DO 5 and DO 6 can be used to issue status alarms; fault alarms can be issued at transistor output DO 7.

Supply voltage

The controller comes with two different power supply units. Specify the required version in your order:

- 85 to 264 V AC
- 24 V AC/DC

Supply output (auxiliary voltage)

A maximum of four two-wire transmitters and four digital inputs can be supplied by this output (21 V DC, 90 mA).

Infrared interface (Fig. 2)

Data are transmitted between the controller and the TROVIS-VIEW Configuration and Operator Interface over an infrared interface integrated into the controller and an infrared adapter (order no. 8864-0900) connected to a PC.

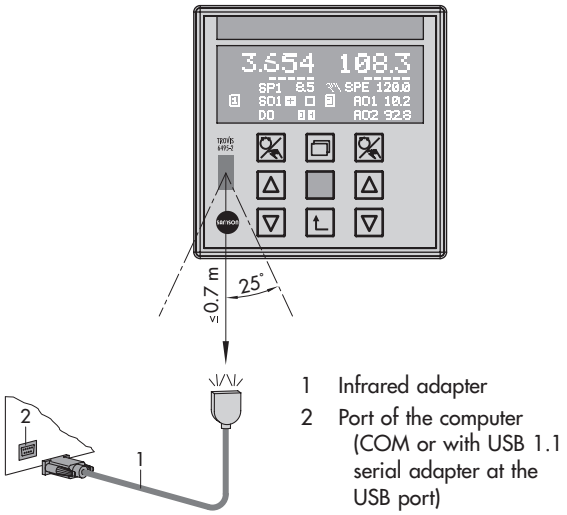

Fig. 2 · Connecting an infrared adapter

Communications interface

The controller can optionally be fitted with one of the two following interface boards. The boards can be retrofitted.

RS-232/USB interface board with

– RS-232 interface (RJ 12 connector) and
– USB interface (5-pin mini-B connector)

RS-232 data transmission uses SSP or Modbus RTU protocol.

RS-485/USB interface board with

– RS-485 interface (four terminals) and
– USB interface (5-pin mini-B connector)

RS-485 data transmission uses SSP or Modbus RTU protocol. The two-/four-wire operation and the active bus termination can be set over slide switches.

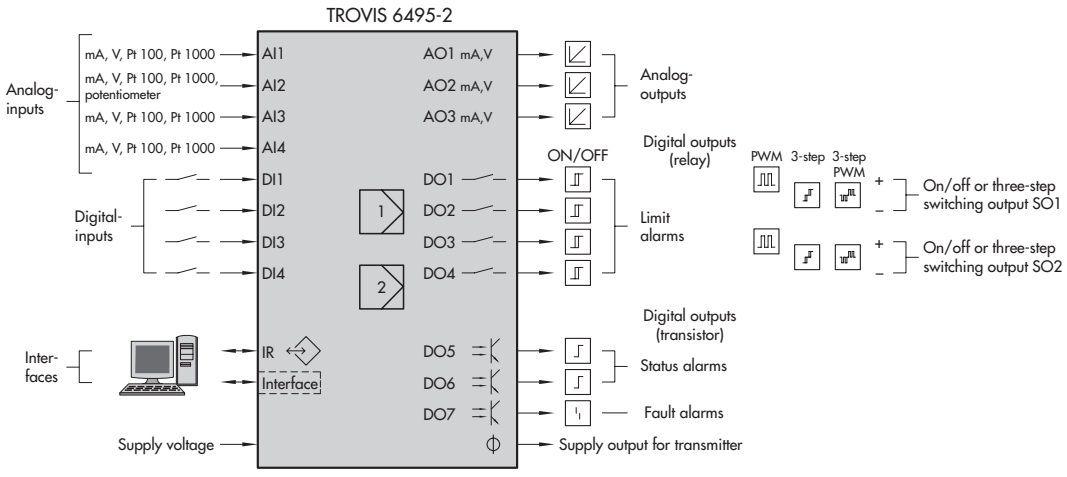

Fig. 3 · Overview of inputs and outputs

Operation

Display and operating controls (Figs. 4)

The device has nine operator keys, of which three are assigned to each controller. Depending on the selected control mode, one or two controllers are activated. Controller [1] is displayed and operated on the left, Controller [2] on the right, or optionally vice versa. The row of keys in the middle is used for both controllers.

Operating level

After the supply voltage has been switched on, the controller is in the operating level.

The readings of the controlled variable, the reference variable and the manipulated variable for each controller as well as a bar graph for error are indicated on the display (1). Depending on the configuration, status alarms of the digital inputs and outputs can be shown. The operating menu allows set points to be switched and control parameters to be changed.

The two rows at the bottom of the display can be assigned as desired. The user can choose between various signals and intermediate calculations inside the controller. For example, the values or a bar graph of two outputs in split-range operation can be displayed.

Configuration and parameterization

In the configuration level, the controller is adapted to the control task to be completed. The functions are arranged in hierarchical menus. All settings are displayed as plain text.

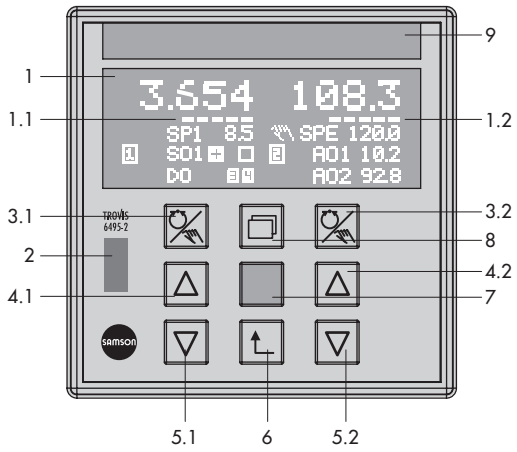

1	Display
1.1/1.2	Bar graph for error, controller [1]/[2]
2	Infrared interface
3.1/3.2	Manual/automatic key, controller [1]/[2]
4.1/4.2	Cursor key, controller [1]/[2]
5.1/5.2	Cursor key, controller [1]/[2]
6	Escape key
7	Enter key
8	Info key
9	Label area

Fig. 4 · Display and operating controls

Key	Key functions in the levels			
	Operating level	**Info menu**	**Operating menu**	**Configuration level**
Manual/ automatic key	– Switch between manual and automatic control mode – **Cascade control:** Open/close controller cascade	– No function –	– No function –	– Edit individual items of parameters
Cursor keys	– **Automatic mode:** Change set point – **Manual mode:** Change output value	– Browse through menu and information	– Browse through a menu – Change set point and control parameters	– Browse through menu, submenu, configuration items and parameters – Change configuration items and parameters
Enter key	– Enter main menu (operating menu and configuration level)	– Enter menu	– Confirm settings – Switch over set point	– Enter menu and submenu, activate configuration items and parameters – Confirm setttings
Info key	– Open info menu	– No function –	– No function –	– No function –
Escape key	– Confirm restart after supply voltage failure	– Return to the operating level step by step	– Return to the operating level step by step	– Return to the operating level step by step

Operation using TROVIS-VIEW

Controller settings (Fig. 5)

Configuration settings and parameters can conveniently be adjusted, documented and transmitted using the optional TROVIS-VIEW software. Working in TROVIS-VIEW is similar to working in Windows Explorer.

TROVIS-VIEW includes a **trend viewer** for start-up that records the process data. Input and output variables are displayed in a clear structure.

The TROVIS-VIEW software is delivered on a CD-ROM. For further information on TROVIS-VIEW refer to Data Sheet T 6661 EN.

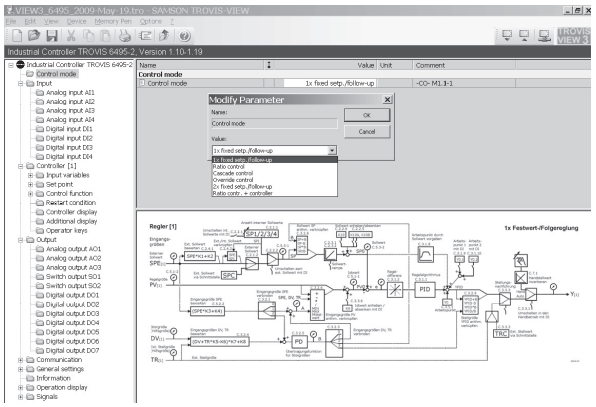

Fig. 5 · Operation using TROVIS-VIEW

Data transmission (Fig. 6)

See section on accessories on page 8 for order numbers.

Data can be transmitted between TROVIS-VIEW and the controller in different ways:

– Data transmission using the **infrared interface** (11) and an infrared adapter (14)
– Data transmission using the optional **interface board** with RS-232 and USB connections: data can be transmitted over a conventional cable, either a USB cable (13) or a connecting cable (15), and a **memory pen** (16).
– The controller can be fitted with the optional RS-485 **interface board** to integrate it into a communications network. This interface board has a USB port used to transmit data over TROVIS-VIEW.

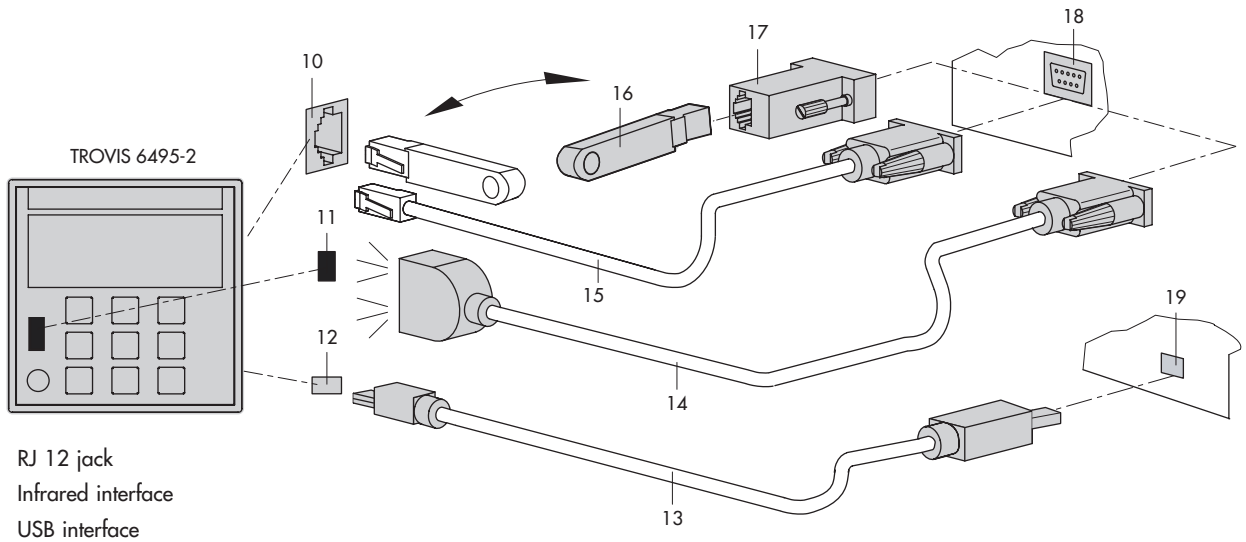

10 RJ 12 jack
11 Infrared interface
12 USB interface
13 USB cable (mini-B, 5-pin – USB type A)
14 Infrared adapter (RS-232)
15 Connecting cable RJ 12/D-sub 9-pin (RS-232)
16 Memory pen (RS-232)
17 Modular adapter RJ 12/D-sub 9-pin (RS-232)
18 COM port (RS-232) on the computer
19 USB port on the computer

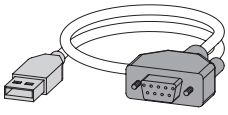

USB 1.1 serial adapter
It can be connected under Windows® 2000 or Windows® XP either over the COM port of the computer or over the USB 1.1 serial adapter.

Fig. 6 · Data transmission

Inputs		
4 analog inputs		mA, V, Pt 100, Pt 1000, input 2 also for potentiometer
mA or V inputs	Version	Differential input
	Nominal signal range	0 to 20 mA, 4 to 20 mA, 0 to 10 V, 2 to 10 V
	Resolution	< 0.04 %, based on nominal signal range
	Permissible signal range	–1 to 22 mA or –0.5 to 11 V
	Input resistance	50 Ω with current; 10 kΩ with voltage
	Static destruction limit	±30 V, 50 mA
Resistance thermometer	For sensor	Pt 100, Pt 1000, according to DIN EN 60751
	Nominal measuring range	–50 to 300 °C (–58 to 572 °F), can be limited
	Connection	Three-wire circuit (resistance per lead < 15 Ω), two-wire circuit
	Resolution	< 0.03 %, based on nominal signal range (< 0.1 °C)
Potentiometer	Nominal values	100, 200, 500, 1000 Ω
	Connection	Three-wire circuit, resistance per lead < 15 Ω
	Resolution	< 0.03 %
General specifications	Measuring error of inputs	< ± 0.2 % of nominal signal range for zero, span, linearity
	Ambient temperature influence	< ± 0.1 %/10 K for zero and span, based on 20 °C
	Input filter	Adjustable
	Function generation	Adjustable using 7 points
	Signal increase/drop	Adjustable
	User calibration	Adjustable
	Transmitter fault alarm	Adjustable, input signal < –5 % or > 105 %
	Transmitter supply	21 V DC, max. 90 mA, resistant to short-circuiting
4 digital inputs		
	Control	Floating switching contact or external switching voltage 24 V DC, 3 mA; two digital inputs both are galvanically connected on one side; Signal state "OFF": 0 to 10 V; signal state "ON": 17 to 31 V; adjustable signal inversion
Outputs		
3 analog outputs		
	Nominal signal range	0 to 20 mA, 4 to 20 mA, 0 to 10 V, 2 to 10 V
	Max. permissible signal range	0 (2.4) to 22 mA or 0 (1.2) to 11 V
	Load	< 750 Ω for current; > 3 kΩ for voltage
	Error of outputs	< ± 0.2 % of the nominal signal range for zero, span, linearity
	Ambient temperature influence	< ± 0.1 %/10 K for zero and span, based on 20 °C
	Resolution	< 0.03 %, based on nominal signal range
	Static destruction limit	±30 V
7 digital outputs		
Relay outputs	4 relays with floating NO contact, can be inverted	
	Permissible contact load	264 V AC, 1 A AC, cos ϕ = 1 or 250 V DC, 0.1 A DC
	Spark suppression	Connected in series C = 2.2 nF and varistor 300 V AC, in parallel to each relay contact
Transistor outputs	3 electrically isolated transistor outputs	
	External supply	3 to 42 V DC, max. 30 mA
Interfaces		
Infrared interface	Transmission protocol	SAMSON-specific protocol (SSP)
	Data that can be transmitted	Controller settings, process variables, operating status
	Transmission rate	9600 bit/s
	Angle of deflection	50°
	Distance IR adapter – controller	≤ 70 cm

Technical data (continued)

RS-232/USB (accessories)	RS-232 with electrical isolation, USB (slave)	
	Connection	USB: 5-pin mini-B · RS-232: RJ 12
	Transmission protocol	USB: SAMSON-specific protocol (SSP) · RS-232: SSP and Modbus RTU
	Data that can be transmitted	Controller settings, process variables, operating status, fault alarms
RS-485/USB (accessories)	RS-485 with electrical isolation, USB (slave)	
	Connection	USB: 5-pin mini-B · RS-485: 4-pin screw terminals
	Transmission protocol	USB: SAMSON-specific protocol (SSP) · RS-485: SSP and Modbus RTU
	Data that can be transmitted	Controller settings, process variables, operating status, fault alarms
	Transmission rate/ format	SSP: 9600 bit/s, 8 bit, no partity bit, 1 start bit Modbus: 300 to 115200 bit/s, 8 bit, parity bit adjustable, 1 (2) stop bits
	Type of transmission	RS-485: Asynchronous, half duplex, 4-wire or 2-wire
	Number of connected devices	RS-485: 32 (can be extended when a repeater is used)
	Number of addressable stations	Modbus: 246
	Line length	RS-485: < 1200 m, max. 4800 m with repeater
	Bus termination	RS-485: Active, selectable
	Transmission medium	RS-485: 2 or 4 cores (twisted-pair cabling, stranded in pairs, with static shield)
General specifications		
Voltage supply		85 to 264 V AC, 47 to 63 Hz or 24 V AC/DC (20 to 30 V), 47 to 63 Hz
Power consumption		85 to 264 V AC: max. 19 VA, fuse 630 mA (slow) 20 to 30 V AC/DC: max. 15 VA, fuse 1.25 A (slow)
Temperature		Ambient: 0 to 50 °C · Storage: – 20 to 70 °C
Storage temperature		–20 to 70 °C
Degree of protection (EN 60529)		IP 65 (front), IP 30 (housing), IP 00 (terminals)
Device safety		According to EN 61010-1: Class of protection II Overvoltage category II Degree of contamination 2
Electromagnetic compatibility		Requirements according to EN 61000-6-2, EN 61000-6-3 and EN 61326-1
Relative humidity		Max. 95 %, non-condensing
Electrical connection		Plug-on screw terminals 1.5 mm² (cross-section of the line 0.5 to 1.5 mm²)
Display		Dot matrix display with 132 x 49 pixels
Display range		–999 to 9999; start value, end value and decimal separator can be adjusted
Total delay time		< 100 ms
Configuration		Functions saved in read-only memory, configuration saved in non-volatile memory
Control types		One or two fixed set point/follow-up control, one ratio control, one cascade control, one ratio and fixed set point/follow-up control, one limitation control
Weight		0.5 kg

Dimensions in mm (inch)

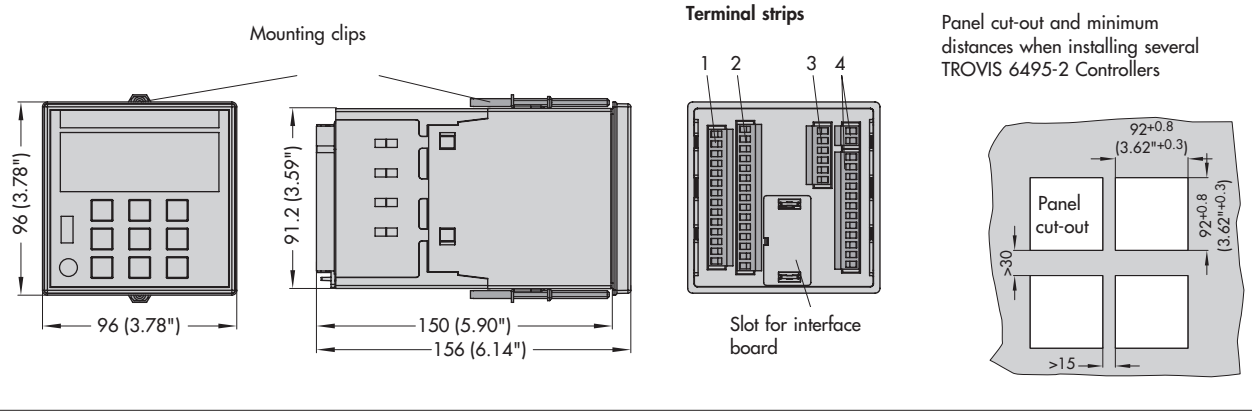

Electrical connection

Terminal strip 1

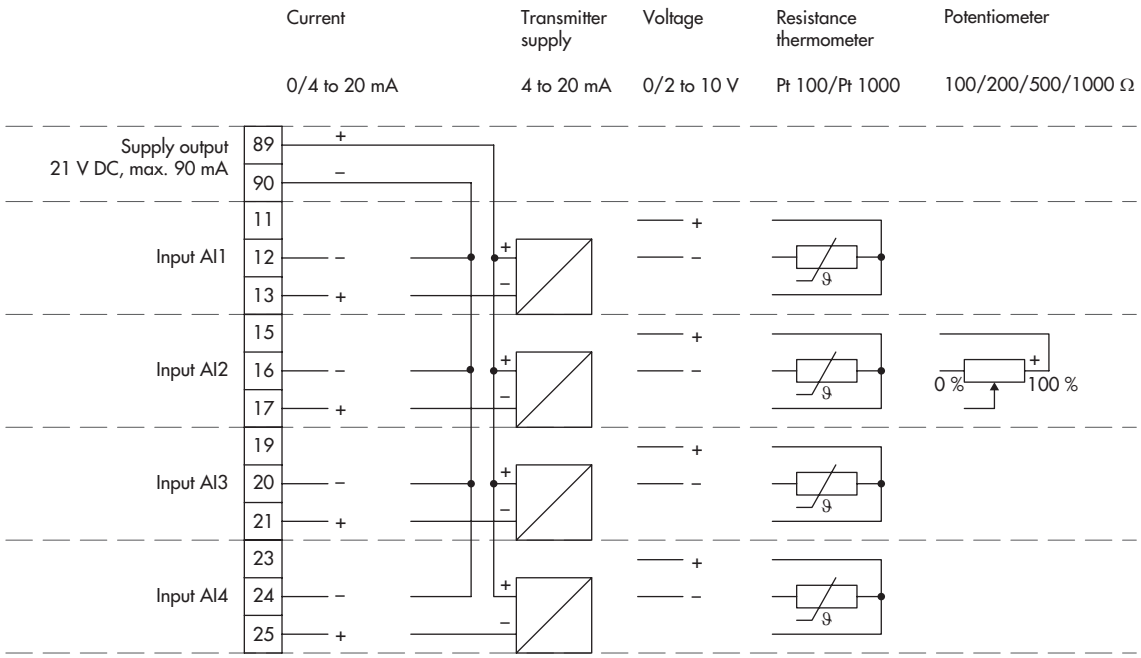

Terminal strip 2

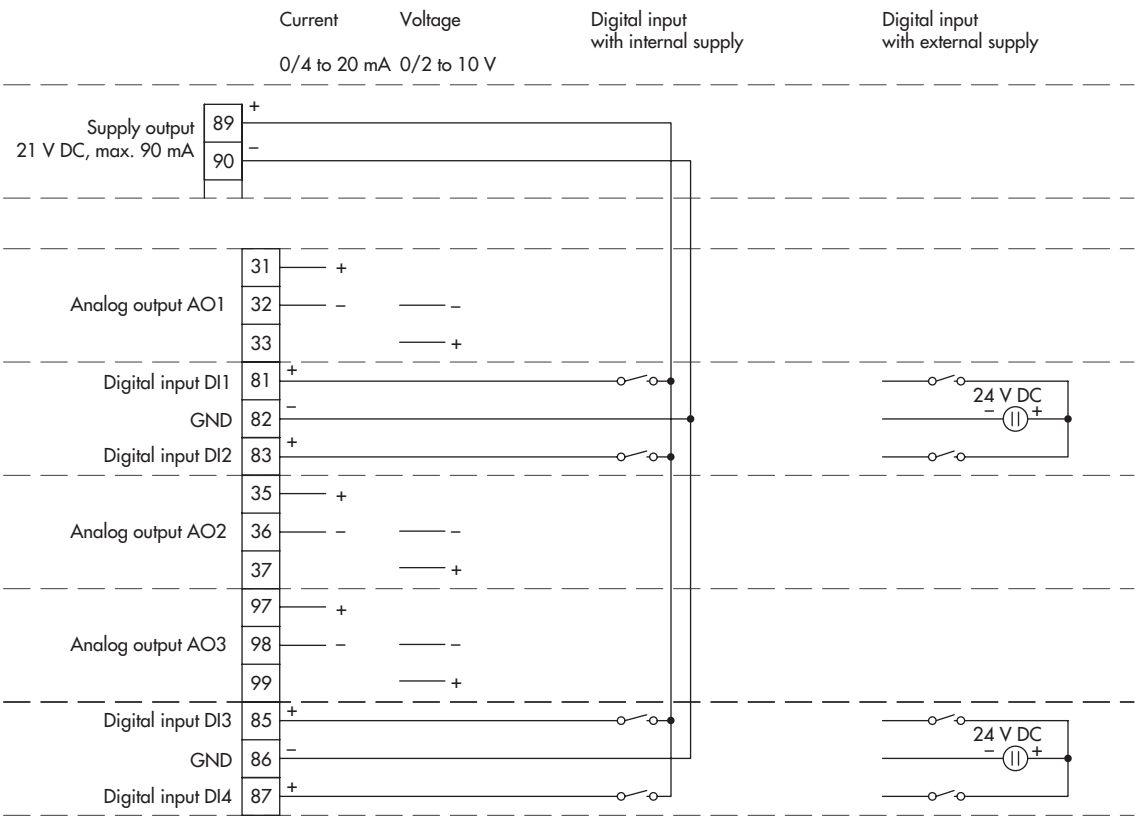

Electrical connection (continued)

Terminal strip 3

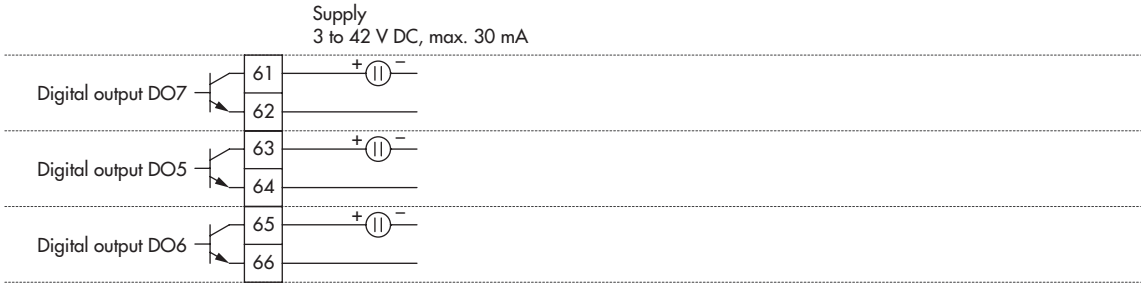

Terminal strip 4

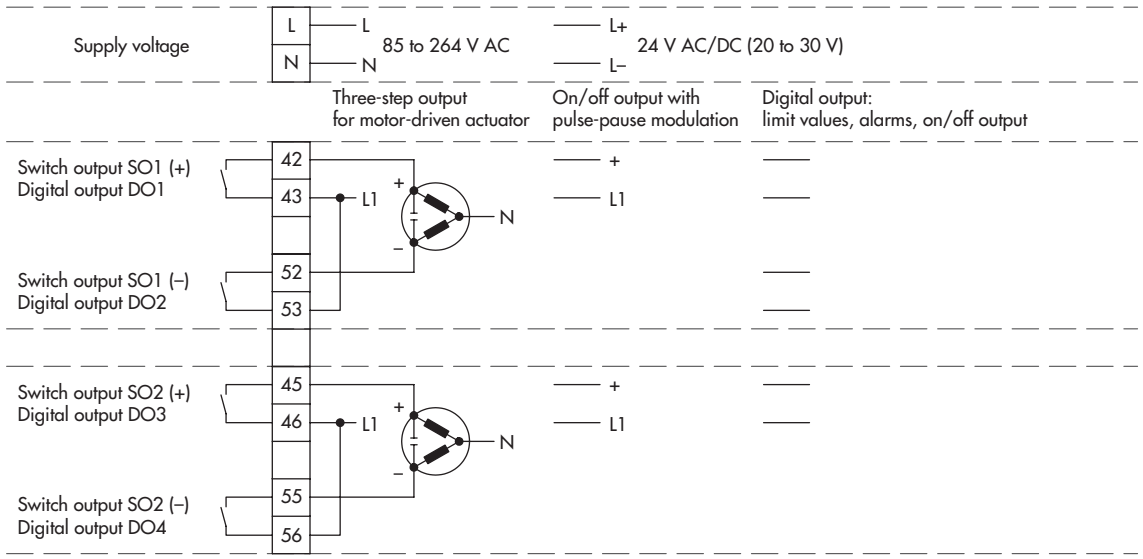

Electrical isolation

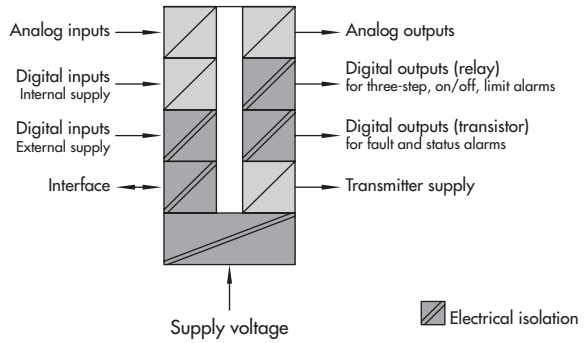

Article code

Industrial controller	**TROVIS 6495-2**	x
Supply voltage		
85 to 264 V AC		**1**
24 V AC/DC		**2**

Accessories	**Order no.**
– TROVIS-VIEW Operator Interface	6661-1033
– Infrared adapter (RS-232)	8864-0900
– Bracket for infrared adapter	1400-9769
– USB 1.1 serial adapter	8812-2001
– Interface board RS-232/USB	1400-9917
– Interface board RS-485/USB	1400-9918
– USB cable (2 m) with type A and 5-pin mini-B connectors	8801-7301
– Cable RJ 12/D-sub 9-pin (RS-232)	1400-7699
– Memory pen (RS-232)	1400-9753
– Modular adapter RJ 12/D-sub 9-pin	1400-7698

Specifications subject to change without notice.

SAMSON AG · MESS- UND REGELTECHNIK
Weismüllerstraße 3 · 60314 Frankfurt am Main · Germany
Phone: +49 69 4009-0 · Fax: +49 69 4009-1507
Internet: http://www.samson.de