Pneumatic Rotary Actuator Type 3278

Application

Single-acting pneumatic rotary diaphragm actuator for butterfly valves and other final control elements with rotary closure members. Suitable for throttling and on/off service.

Maximum opening angle φ = 90°

The Type 3278 Pneumatic Rotary Actuator is equipped with a rolling diaphragm and internal springs

- Operating direction (spring opens/spring closes) can be customized
- Various bench ranges
- Externally adjustable stop screws to limit the opening angle
- No special tools needed for mounting and conversion
- Designed for supply pressures up to max. 6 bar
- Continuous operation at temperatures from –35 to +90 °C
- Connections according to DIN ISO 5211
- Actuator shaft available in three different diameters depending on the actuator size

Versions

Pneumatic rotary actuator (Fig. 1) with an effective diaphragm area of 160 or 320 cm^2.

– **Type 3278** · Without handwheel
– **Type 3278** · With handwheel

Further versions with

– Type 3766 Pneumatic Positioner (see Data Sheet T 8355 EN) or
– Type 3767 Electropneumatic (i/p) Positioner (see Data Sheet T 8355 EN)
– Type 3776 Limit Switch (see Data Sheet T 8368 EN)
– Type 3963 Solenoid Valve (see Data Sheet T 963 EN)
– Type 3780 Electropneumatic Positioner (see Data Sheet T 8380 EN)
– Type 3761 Electropneumatic Positioner (see Data Sheet T 8386 EN)

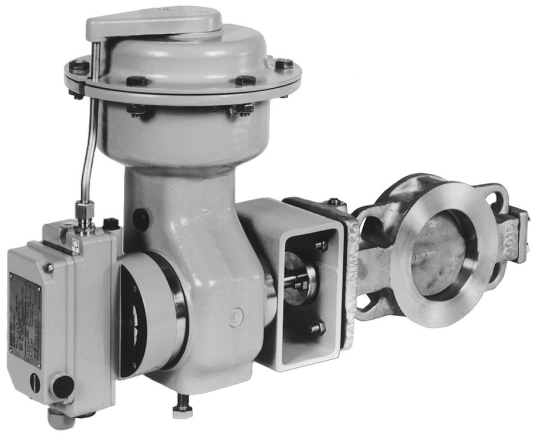

Fig. 1 · Type 3278 Pneumatic Rotary Actuator

Principle of operation (Fig. 2)

The signal pressure p_{st} generates a force at the diaphragm surface which is balanced by the compression springs (4). In this process, the linear motion of the actuator stem (5), which is proportional to the signal pressure, is transmitted to the lever system (6), where it is converted into a rotary motion. The upper and lower limits of the opening angle can be adjusted using the two externally accessible stop screws (8).

The bench range and useable actuator torque are determined by the number of springs and their compression.

The final control element can be connected to either flange 1 or 2. For both connections, the flange dimensions and sleeve shaft (7) with four feather key notches are designed according to DIN ISO 5211.

In case the signal pressure fails, the connected valve moves to the predetermined fail-safe position, in which the actuator springs (4) either close (fail-close) or open (fail-open) the final control element depending on the respective fail-safe action and whether the final control element is attached to flange 1 or 2.

Fail-safe position

Control valve CLOSED when the supply air fails

The springs close the connected final control element whenever the pressure acting on the diaphragm decreases or the supply air fails.

Control valve OPEN when the supply air fails

The springs open the final control element whenever the pressure acting on the diaphragm decreases or the supply air fails.

Torque characteristic curve (Fig. 3)

The characteristic of torque is determined by the lever design. Fig. 3 illustrates a typical example of the useable air torques M_{dL} and useable spring torques M_{dF} plotted versus the opening angle φ.

Table 1 · Technical data

Perm. supply pressure	6 bar
Diaphragm area	160 cm² · 320 cm²
Angle of rotation	90°
Number of springs	3
Bench ranges	7 (through different spring combinations)
Perm. temperatures	–35 to 90 °C in continuous operation

Table 2 · Materials

Housing	EN-JS1049, powder-varnish coated
Rolling diaphragm	NBR (nitrile rubber) with fabric insert (polyester)
Diaphragm plate	Sheet steel, zinc coated/chromized
Springs	55 Si Cr 6
Actuator stem	St 37, zinc coated/chromized
Actuator shaft	En-JS1049, zinc coated/chromized

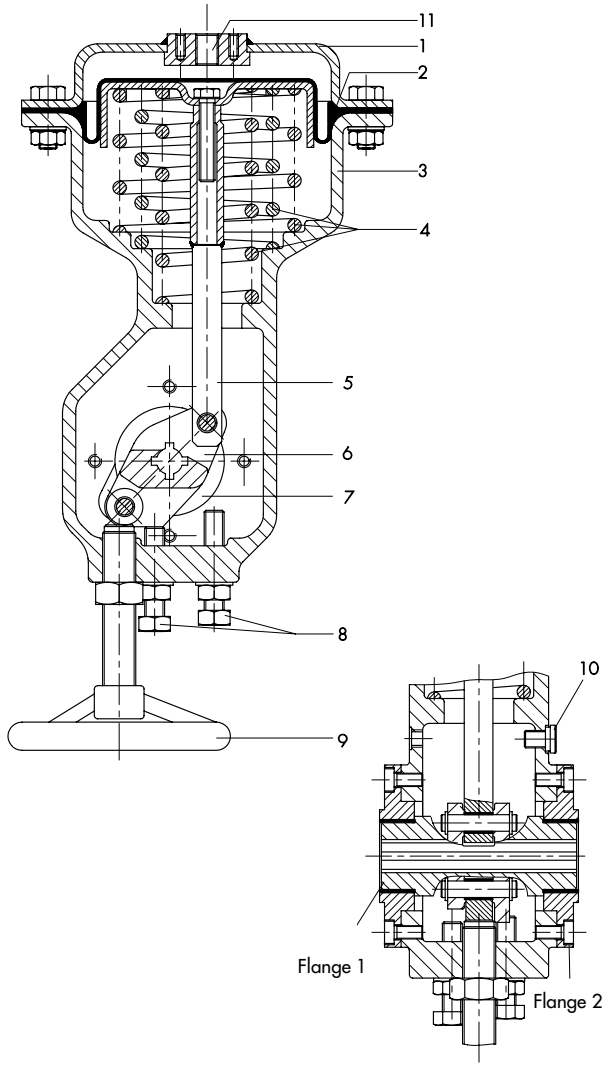

1 Cover plate
2 Diaphragm
3 Housing
4 Springs
5 Actuator stem
6 Lever system
7 Actuator shaft
8 Stop screws
9 Handwheel
10 Vent plug
11 Supply pressure connection

Fig. 2 · Type 3278 Rotary Actuator with handwheel

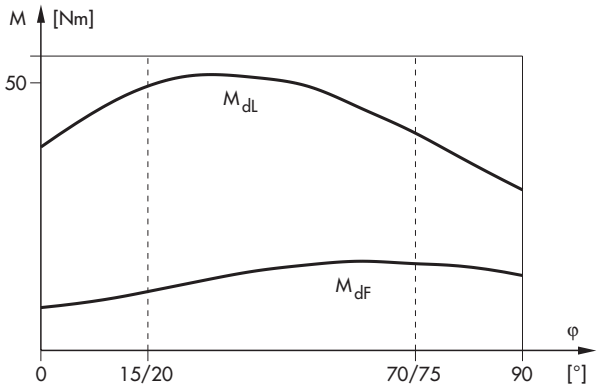

Fig. 3 · Example illustrating the torque characteristic

Table 3a · Usable air torques · Diaphragm area 160 cm^2, all pressures in bar (gauge)

Bench range	Opening angle	Usable air torques M in Nm at maximum supply pressure p_t									
		1.5	2.0	2.5	3.0	3.5	4.0	4.5	5.0	5.5	6.0
0.4...0.8[1)]	0°	26	38	50	62	74	86	97	109	121	133
	70°/75°	22	38	54	69	85	101	116	132	148	163
	90°	16	29	41	54	67	79	92	104	117	129
	M_{max}	40	58	76	95	113	133	150	169	187	206
0.5...1.0	0°	23	35	47	59	71	83	95	107	119	131
	70°/75°	17	33	49	64	80	96	111	127	143	158
	90°	12	24	37	50	62	75	87	100	112	125
	M_{max}	34	52	70	89	107	126	144	163	181	200
0.8...1.6	0°	16	28	40	52	64	76	88	100	111	123
	70°/75°	–	15	30	46	62	77	93	109	124	140
	90°	–	9	21	34	46	59	71	84	97	109
	M_{max}	–	33	50	68	86	105	123	142	160	179
0.9...1.8[1)]	0°	14	26	37	49	61	73	85	97	109	121
	70°/75°	–	–	24	40	55	71	87	102	118	134
	90°	–	–	16	28	41	53	66	78	91	104
	M_{max}	–	–	44	62	80	99	117	136	154	173
1.2...2.4	0°	6	18	30	42	54	66	78	90	102	114
	70°/75°	–	–	–	21	37	53	68	84	100	115
	90°	–	–	–	12	25	37	50	63	75	88
	M_{max}	–	–	–	50	68	83	101	119	137	157
1.3...2.6[1)]	0°	4	16	27	40	51	63	75	87	99	111
	70°/75°	–	–	–	16	32	47	63	79	95	110
	90°	–	–	–	8	21	33	46	58	71	83
	M_{max}	–	–	–	45	62	79	97	115	134	153
1.7...3.4	0°	–	6	18	30	42	54	65	77	89	101
	70°/75°	–	–	–	–	–	23	38	54	70	86
	90°	–	–	–	–	–	12	24	37	49	62
	M_{max}	–	–	–	–	–	62	79	95	113	131

Table 3b · Usable air torques · Diaphragm area 320 cm^2, all pressures in bar (gauge)

Bench range	Opening angle	Usable air torques M in Nm at maximum supply pressure p_t									
		1.5	2.0	2.5	3.0	3.5	4.0	4.5	5.0	5.5	6.0
0.4...0.8[1)]	0°	88	128	168	208	248	288	328	368	408	448
	70°/75°	78	131	183	235	288	340	392	445	497	549
	90°	57	99	140	182	223	266	307	349	390	432
	M_{max}	130	190	258	325	393	460	528	595	663	730
0.5...1.0	0°	80	120	160	200	240	280	320	360	400	440
	70°/75°	57	110	162	214	267	319	371	424	476	528
	90°	38	80	122	163	205	247	289	331	372	414
	M_{max}	110	170	238	305	373	440	508	575	643	710
0.8...1.6	0°	56	96	136	176	216	256	296	336	376	416
	70°/75°	–	55	107	160	212	264	317	369	421	474
	90°	–	34	75	117	159	200	242	284	326	367
	M_{max}	–	110	178	245	313	380	448	515	583	650
0.9...1.8[1)]	0°	48	88	128	168	208	248	288	328	368	408
	70°/75°	–	–	83	136	188	240	293	345	397	449
	90°	–	–	54	96	137	179	221	263	305	346
	M_{max}	–	–	158	225	293	360	428	495	563	630
1.2...2.4	0°	24	64	104	144	184	224	264	304	344	384
	70°/75°	–	–	–	81	134	186	238	291	343	395
	90°	–	–	–	49	91	133	174	216	258	300
	M_{max}	–	–	–	190	253	315	378	440	508	573
1.3...2.6[1)]	0°	16	56	96	136	176	216	256	296	336	376
	70°/75°	–	–	–	60	112	165	217	269	322	374
	90°	–	–	–	31	73	114	156	198	240	281
	M_{max}	–	–	–	175	238	300	363	425	493	560
1.7...3.4[1)]	0°	–	24	64	104	144	184	224	264	304	344
	70°/75°	–	–	–	–	–	86	138	191	243	295
	90°	–	–	–	–	–	47	88	130	172	213
	M_{max}	–	–	–	–	–	235	298	360	420	480

[1)] Special range

Table 4 · Usable spring torques

All pressures in bar (gauge)

Bench range	Opening angle	Usable spring torques M in Nm at diaphragm area cm²	
		160 cm²	320 cm²
0.4...0.8[1]	0°	10	32
	15°/20°	15	49
	90°	21	67
	M_{max}	24	85
0.5...1.0	0°	12	40
	15°/20°	19	61
	90°	23	85
	M_{max}	28	115
0.8...1.6	0°	20	64
	15°/20°	30	97
	90°	42	132
	M_{max}	50	175
0.9...1.8[1]	0°	22	72
	15°/20°	34	109
	90°	47	153
	M_{max}	55	200
1.2...2.4	0°	30	96
	15°/20°	45	145
	90°	63	200
	M_{max}	77	265
1.3...2.6[1]	0°	32	104
	15°/20°	48	157
	90°	67	218
	M_{max}	82	285
1.7...3.4	0°	42	136
	15°/20°	63	206
	90°	89	286
	M_{max}	107	375

[1] Special range

Ordering text

Type 3278 Pneumatic Rotary Actuator

Handwheel	Without/with
Diaphragm area	160/320 cm²
Fail-safe action	Actuator stem extends or retracts
Bench range	... bar
Adjusted to	... bar
Shaft diameter	... mm
Accessories	Positioner and/or limit switch and/or solenoid valve

Optionally, special version

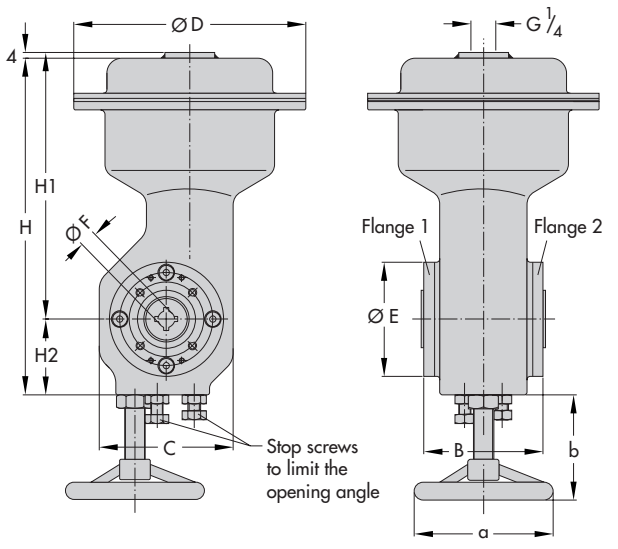

Fig. 4 · Dimensional drawing

Table 5 · Dimensions and weights

Actuator size	Ø D	H	H1	H2	C	B	Ø E	Ø F[2]	Ø a	b (approx.)	Connecting flanges acc. to DIN ISO 5211	Weight (approx. kg)
160 cm²	225	332	260	72	132	118	110	16[1] 20/25	180	120	F07	16
320 cm²	295	516	421	95	183	162	150	25[1] 36/40	250	150	F12	50

[1] Standard version for Type 3331 Butterfly Valve

[2] Sleeve shaft with 4 slots rotated by 90° to accommodate the shaft of the final control element (shaft end with feather key notch according to DIN 6885)

Specifications subject to change without notice.

SAMSON AG · MESS- UND REGELTECHNIK
Weismüllerstraße 3 · 60314 Frankfurt am Main · Germany
Phone: +49 69 4009-0 · Fax: +49 69 4009-1507
Internet: http://www.samson.de