Flow Regulators with Electric Actuator

Type 2488/5824 and Type 2488/5825

Fig. 1 · Type 2488/5824 Flow Regulator with Electric Actuator

Mounting and Operating Instructions

EB 3135-1 EN

Edition June 2008

Contents Page

1	**Design and principle of operation**	4
2	**Installation**	4
2.1	Mounting position	4
2.2	Strainer	4
2.3	Additional installation instructions	6
3	**Operation**	6
3.1	Start-up	6
3.2	Set point adjustment	6
3.2.1	Adjustment without actuator	6
3.2.2	Adjustment with Type 5824 Actuator	7
3.2.3	Adjustment with Type 5825 Actuator	7
4	**Maintenance–Replacing parts**	8
4.1	Replacing the orifice	8
4.2	Cleaning or replacing the plug	9
4.3	Replacing the diaphragm	9
5	**Nameplate**	9
6	**Troubleshooting**	10
7	**Customer inquiries**	10
8	**Dimensions and weights**	11

Note!

Non-electric actuators and control valve versions do not have their own potential ignition source according to the ignition risk assessment stipulated in EN 13463-1: 2001, section 5.2, even in the rare incident of an operating fault. Therefore, they ***do not*** *fall within the scope of Directive 94/9/EC.*

For connection to the equipotential bonding system, observe the requirements specified in EN 60079-14: 1977 (VDE 0165 Part 1), section 6.3.

General safety instructions

- *The flow regulator must be installed, started up, and serviced only by skilled or semi-skilled staff in accordance with good engineering practice so that employees and third persons are not exposed to danger.*
  All safety instructions and warnings given in these mounting and operating instructions, particularly those concerning installation, start-up, and maintenance, must be strictly observed.
- *The regulator complies with the requirements of the European Pressure Equipment Directive 97/23/EC. The declaration of conformity issued for a valve bearing the CE marking includes information on the applied conformity assessment procedure and will be provided on request.*
- *To ensure appropriate use, only use the regulator in applications where the operating pressure and temperatures do not exceed the operating values specified in the order.*
  Note that the manufacturer does not assume any responsibility for damage caused by external forces or any other external factors.
  Take appropriate safety precautions to prevent hazards that may be caused in the regulator by the process medium, operating pressure, or moving parts.
- *Make sure the regulator is shipped and stored properly.*
- *The electric actuator has been designed for use in electrical power installations. Strictly observe the relevant safety regulations for wiring and maintenance work. Only use disconnect devices that are protected against accidental or inadvertent reconnection. Take special care when making adjustments on live parts. Do not remove the covers under any circumstances.*

Important!

- *Depending on the field of application, allow the regulator to cool down or warm up to reach ambient temperature prior to starting any work.*
  Always depressurize the relevant section of the plant and, if necessary, also drain the pipeline prior to removing the regulator from the pipeline.
- *When controlling freezing media, protect the flow regulator against frost.*

1 Design and principle of operation

The device combines a Type 2488 Flow Regulator with a force-locking Type 5824 Actuator or a force-locking Type 5825 Electric Actuator with fail-safe action. The electric actuator is attached to the regulator by means of the adapter and allows also the temperature to be controlled by changing the position of the orifice (restriction) in response to the control signal received from an electric control device.

The medium flows through the valve in the direction indicated by the arrow on the valve body. The flow rate depends on the area released by the valve plug (3) and the adjustable orifice (8.5).

The integral positioning spring (5) determines the upper differential pressure (0.2 bar).

The high pressure upstream of the orifice is transmitted to the high-pressure side of the diaphragm actuator through the control line (7). The low pressure downstream of the orifice acts on the low-pressure side of the operating diaphragm (6.1) via a hole in the valve plug. The differential pressure generated by the orifice (special differential pressure) is converted into a positioning force by the operating diaphragm. This force is used to position the valve plug against the force of the positioning spring (5).

2 Installation

2.1 Mounting position

Install the regulator in a horizontal pipeline. Make sure the direction of flow corresponds with the arrow on the valve body. Place the electric actuator on top of the valve body.

In cases where the control valve is to be insulated, do not insulate the actuator and coupling nut as well.
Make sure that the permissible ambient temperature is not exceeded especially at the actuator stem (10.1). If necessary, use an extension piece (intermediate insulating piece, order no. 1990-1712). Refer to section 8. The maximum distance up to the top of the valve body that can be insulated can be extended to approx. 25 mm.

Note!
Observe the instructions for the electric actuator specified in EB 5824 EN.
Types 5824-10/-11 and 5825-10/-11 Electric Actuators with a 7.5 mm rated travel are used for valves in sizes DN 15 to 25.
Types 5824-20 and 5825-20 Electric Actuators with 12 mm rated travel are required for valves in nominal sizes DN 32 to 50.

2.2 Strainer

Install a strainer (e.g. SAMSON Type 1 NI) upstream of the valve to prevent sealing particles, weld spatter, pipe scale, and other impurities carried along by the process medium from impairing the proper operation, especially the tight shut-off of the valve.

DN 15 to 25, PN 25

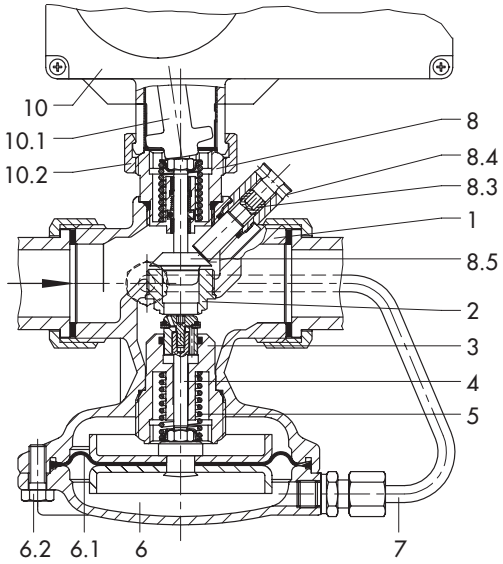

DN 15 to 25, PN 16

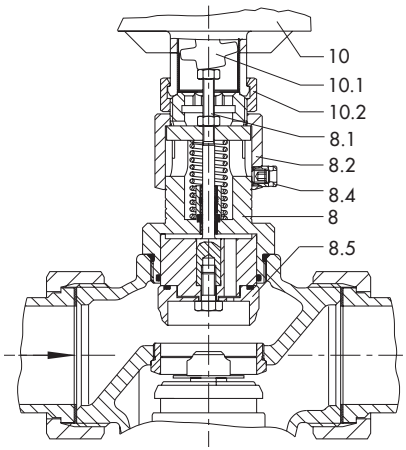

Fig. 2 · Sectional drawings

Legend

1	Valve body
2	Seat
3	Guide nipple with plug assembly
4	Plug stem
5	Positioning spring
6	Diaphragm actuator
6.1	Operating diaphragm
6.2	Screws
7	Control line
8	Adapter
8.1	Orifice stem
8.2	Set point adjuster
8.3	Adjustment screw
8.4	Lead-sealed hole
8.5	Orifice (restriction)
10	Electric actuator
10.1	Actuator stem
10.2	Coupling nut

DN 32 to 50

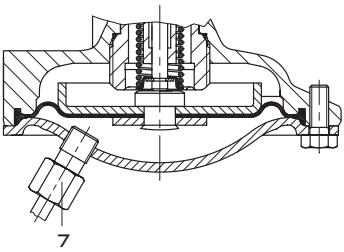

Tightening torques for	DN	Nm
Coupling nut (10.2)		20
Guide nipple (3)	15...25 32...50	70 110
Screws (6.2)	15...25 32...50	8 18
Adapter (8)	15...25 32...50	80 110

Make sure that the medium flow corresponds with the direction indicated by the arrow on the strainer body. Install the strainer with the filter element suspended downwards.
Ensure that ample space is available to remove the filter.

2.3 Additional installation instructions

Ideally, hand-operated shut-off valves should be installed both upstream of the strainer and downstream of the regulator. This allows the plant to be shut down for cleaning and maintenance routines, or when it is not operated for long periods of time. To monitor the pressures prevailing in the plant, install pressure gauges both upstream and downstream of the regulator.

3 Operation

3.1 Start-up

Important!
Before starting up or pressurizing the regulator, make sure the orifice (8.5) used to limit the flow rate is open.
To open the orifice, retract the actuator stem of the electric actuator using the manual adjuster or the electrical control signal. Disconnect electric actuators with fail-safe action from the power supply before disassembling them in order to open the orifice.

Fill the plant very slowly on start-up.

When carrying out a pressure test on the section of the plant equipped with a regulator, prevent the diaphragm actuator from being damaged by the test pressure by using a test pressure which does not exceed the maximum permissible differential pressure Δp of the diaphragm actuator.

3.2 Set point adjustment

The flow rate can be adjusted both with and without the electric actuator being attached to the valve.

3.2.1 Adjustment without actuator

For valve sizes DN 15 to 25, the flow rate can be set by turning the adjustment screw (8.3) at the side using a 4 mm hex wrench. For valve sizes DN 32 to 50, the set point adjuster (8.2) is used to adjust the flow rate.

1. Turn the adjustment screw (8.3) or set point adjuster (8.2) clockwise as far as it will go to close the orifice (8.5) (the orifice of valves in sizes DN 15 to 25 is closed upon delivery).
2. Determine the number of turns of the screw or adjuster required to achieve the desired flow set point from the adjustment diagram on page 7.
   (For valve size DN 15, the adjustment curve that corresponds with the flow coefficient Kvs indicated on the nameplate must be selected).
3. Based on a closed orifice, adjust the flow set point by turning the screw or adjuster counterclockwise. Check the flow rate and correct it, if necessary.
4. Secure the setting using the lead-sealing hole or leading screw.

3.2.2 Adjustment with Type 5824 Actuator

1. Retract the actuator stem by turning the handwheel counterclockwise or by applying a corresponding control signal from the control device.
2. Continue as described in section 3.2.1.

3.2.3 Adjustment with Type 5825 Actuator

1. Switch the control device to manual mode and change the control signal to retract the actuator stem all the way and compress the spring mechanism.

Nominal size	**15**				**20**	**25**	**32**	**40** [1]	**50** [1]
K_{VS}	0.4	1	2.5	4	6.3	8	12.5	16/20 [2]	20/25 [2]
Set point range flow rate m³/h				0.6...1.3 [3]	0.8...2.3 [3]	0.8...3.5 [3]	2...5.8 [3]	3...9.1 [3]	4...14.1 [3]
	0.03...0.2	0.1...0.64	0.2...1.2	0.6...2.5	0.8...3.6	0.8...5	2...10	3...12.5	4...15

[1] Also available as version with flanged body
[2] K_{VS} for flanged body
[3] A higher noise level will occur if the specified set point values are exceeded

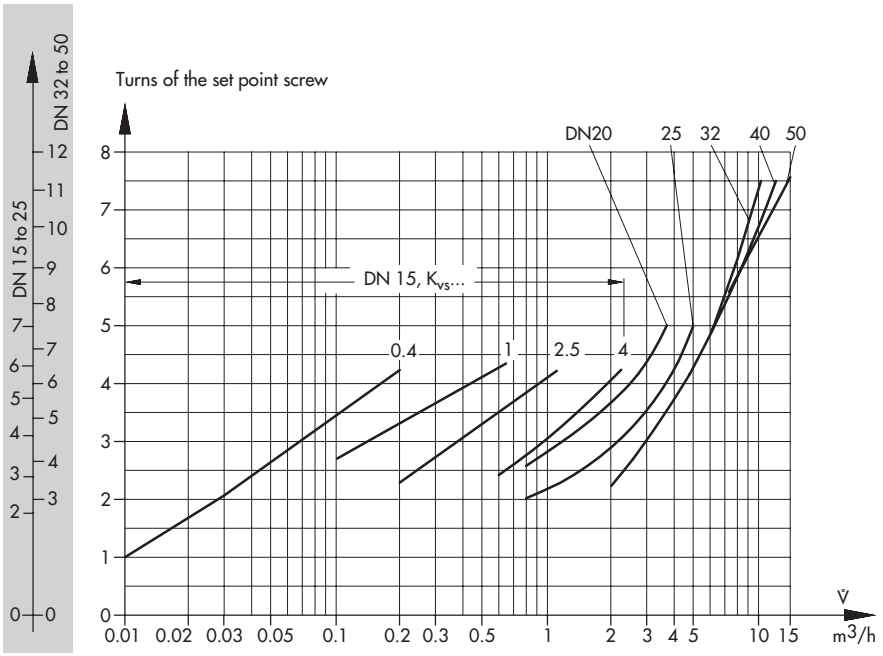

Fig. 3 · Diagram for adjusting the flow rate

If there is no control signal, the actuator can be adjusted manually. For manual adjustment, remove the front case cover. Insert a 4 mm hex wrench into the red actuating shaft and turn it.
Only turn the shaft counterclockwise and only up to the point at which the torque switch in the actuator is activated. Once the magnet has been released, the spring mechanism will push the actuator stem back to the fail-safe position.

Caution!
Observe the relevant safety regulations on connecting the electric actuator or performing any maintenance on it.

2. Continue as described in section 4.1.

Note!
The flow rate indicated in the diagram is reduced by approximately 20 % for valves in sizes DN 32 to 50 which are combined with Type 5821/5822 Actuators.

4 Maintenance–Replacing parts

The flow regulator is maintenance free. Nevertheless, it is subject to natural wear, particularly at the seat, plug, and operating diaphragm.

Depending on the operating conditions that prevail, inspect the regulator at regular intervals to avoid possible malfunctions.

If the valve does not close tightly, this may be caused by a dirty seat and plug or due to natural wear.

If the flow rate deviates considerably from the adjusted set point, e.g. rapidly increasing flow rate, check the operating diaphragm for ruptures and replace it, if necessary.

Prior to carrying out any maintenance work on the flow regulator, it must be removed from the pipeline. For this purpose, make sure the relevant section of the pipeline is depressurized and drained as well before removing the regulator from the pipeline.
Before removing the actuator from the valve, switch off the power supply and protect it from being reconnected unintentionally.

4.1 Replacing the orifice

1. Unscrew the coupling nut (10.2). Remove the actuator from the valve.
2. **Note!** For sizes DN 15 to 25, unscrew the adjustment screw (8.3) first.
   Use a socket wrench (order no. 1280-3001, or a self-made wrench (refer to section 4.2, step 4) to unscrew the adapter (8) of the orifice. Then pull it out of the valve body.
3. Replace parts with new ones and reassemble in reverse order. Observe the tightening torques specified in Fig. 2.

4.2 Cleaning or replacing the plug

1. Unscrew the coupling nut and remove the actuator from the valve.
2. Unscrew the control line (7).
3. Unscrew the screws (6.2). Remove the bottom diaphragm case together with the operating diaphragm (6.1) and diaphragm plate.
4. **For valve sizes DN 15 to 25**, unscrew the guide nipple of the plug assembly (3) using a socket wrench (order no. 1280-3001) or a self-made wrench made from a Gedore screwdriver bit (IN 19-19), for example, by drilling a 17 mm hole with a 17 mm diameter into the 19 mm hexagon bit (Fig. 4). Then pull out the guide nipple.
   For valve sizes DN 32 to 50, unscrew the stopper first. Then pull out the plug assembly.
5. Thoroughly clean the seat and plug. Check the control line and screw fitting for any blockages. Should the plug be damaged, replace the entire plug assembly with a new one.
6. To reassemble, proceed in reverse order. Observe the tightening torques specified in the table in Fig. 2.

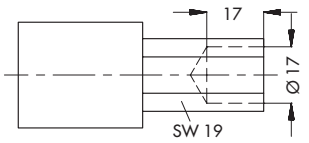

Fig. 4 · Socket wrench

4.3 Replacing the diaphragm

1. Unscrew the coupling nut and remove the actuator from the valve.
2. Unscrew the control line (7).
3. Unscrew the screws (6.2). Remove the bottom diaphragm case together with the operating diaphragm (6.1) and diaphragm plate.
4. Replace the diaphragm together with the diaphragm plates with new ones.
5. To reassemble, proceed in reverse order. Observe the tightening torques specified in the table in Fig. 2. Prior to reattaching the actuator, make sure that the diaphragm has been inserted properly in the ring groove.

5 Nameplate

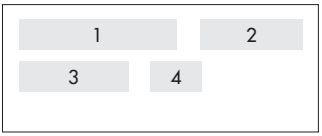

1 Configuration ID
2 Type designation
3 Model number
4 Date of manufacture

In the other fields:

K_{VS} or C_V
Upper differential pressure in bar or psi
Flow set point range in m^3/h
Max. perm. temperature in °C or °F
Max. perm. differential pressure Δp
Nominal pressure PN or ANSI Class

Fig. 5 · Labeling

6 Troubleshooting

Fault	Possible causes	Solution
Flow rate exceeds adjusted set point	Valve too large for control task	Recalculate K_{VS} and contact SAMSON.
	Seat and plug leak	Remove valve, clean seat and plug. If necessary, replace plug (section 4.2). Otherwise, return device for repair.
	Operating diaphragm defective	Replace diaphragm (section 4.3) or return device for repair.
	Control line blocked	Remove and clean control line.
Flow set point not reached	Incorrect set point range selected	Check set point range and contact SAMSON.
	Safety device, e.g. pressure regulator, has been triggered	Check plant, unlock safety device.
	Electric actuator extended	Check control signal from the electric control device.
	Insufficient pressure drop across the plant	Compare existing differential pressure in the plant with the plant's drag. Min. diff. pressure = special diff. pressure + $(\dot{V}/ K_{VS})^2$
	Strainer blocked	Drain and clean filter of the strainer.
	Valve installed against direction of flow	Re-install valve such that direction of flow corresponds to arrow on the body.
Control loop hunts	Valve too large for control task	Recalculate K_{VS} and contact SAMSON.

7 Customer inquiries

Should you have any inquiries, please submit the following details:

- Type and nominal size of the valve
- Threaded or flanged connection
- Model number
- Upstream and downstream pressures
- Flow rate in m^3/h
- Has a strainer been installed?
- Installation drawing

8 Dimensions and weights

Nominal size DN		15	20	25	32	40	50
Pipe external Ø d		21.3	26.8	32.7	42	48	60
Connection R		G ¾	G 1	G 1¼	G 1¾	G 2	G 2½
Width across flats SW		30	36	46	59	65	82
Length L		65	70	75	100	110	130
Height H		155			216		
Height H1	PN 25	85			105	140	
	PN 16	105			–	–	
Standard versions							
Welding ends L1		210	234	244	268	294	330
Weight, approx. kg		3.0	3.1	3.2	4.4	6.9	7.4
Special version with threaded ends (male thread)							
Length L2		129	144	159	180	196	228
Male thread A		G ½	G ¾	G 1	G 1¼	G 1½	G 2
Weight, approx. kg		3.0	3.1	3.2	4.4	6.9	7.4
Special version with flanges PN 16/25 or version with flanged valve body (DN 32/40/50)							
Length L3		130	150	160	180	200	230
Weight, approx. kg		3.6	4.3	4.9	9.1	10.4	11.9

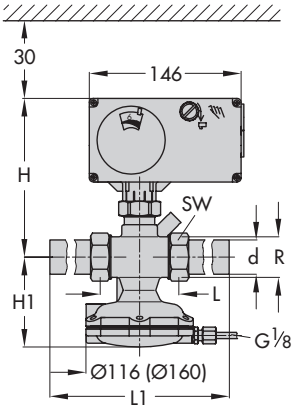

Connection nuts with welding ends

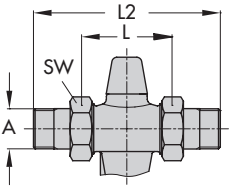

Connection nuts with threaded ends

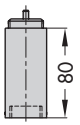

Intermediate insulating piece

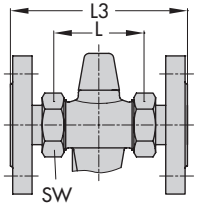

Connection nuts with flanges

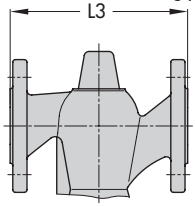

Flanged body DN 32 to 50

Fig. 6 · Dimensional drawings (dimensions in mm, values in parentheses for DN 40 and DN 50)

SAMSON AG · MESS- UND REGELTECHNIK
Weismüllerstraße 3 · 60314 Frankfurt am Main · Germany
Phone: +49 69 4009-0 · Fax: +49 69 4009-1507
Internet: http://www.samson.de

EB 3135-1 EN

S/Z 2008-06