Self-operated Temperature Regulators
Safety Temperature Limiters (STL) with Safety Thermostat Type 2212

Application

Safety temperature limitation of the energy supplied to heat generators or heat exchangers by closing and locking the valve. Additional pressure limitation when equipped with a pressure limiter (PL) or an electromagnetic release device.

For limit signals from **10** to **170 °C** · With valves in sizes **DN 15** to **DN 150** · **PN 16** to **PN 40** · Max. **350 °C**

Note

Typetested devices are available for installations acc. to DIN 4753.
Refer to Information Sheet T 2040 EN for details on application of the safety temperature limiters.

Safety temperature limiters (STL) with a valve and a Type 2212 Safety Thermostat operate without auxiliary energy and are designed for "Extended Safety" acc. to DIN EN 14597. The valve is closed and locked by a spring mechanism when the temperature reaches a limit, when the capillary tube ruptures or there is a leak in the sensor system. The limiters can only be reset and put back into operation with a tool after the temperature has fallen below the limit and the fault has been removed.

Versions

The **Type 2212** Safety Thermostat consists of a temperature sensor (only with thermowell), capillary tube and an operating element with spring mechanism and limit value adjuster.

Type 2111/2212 · With Type 2111 Globe Valve for DN 15 to DN 50 and Type 2212 Thermostat · Unbalanced · With flanges

Type 2114/2212 · With Type 2114 Globe Valve for DN 15 to DN 150 and Type 2212 Thermostat · Balanced · With flanges

Type 2118/2212 · With Type 2118 Three-way Valve for DN 15 to 50 and Type 2212 Thermostat · Unbalanced · With flanges

Type 2119/2212 · With Type 2119 Three-way Valve for DN 15 to 150 and Type 2212 Thermostat · Balanced [1] · With flanges

Temperature regulators and **safety temperature limiters (TR/STL)** (Fig. 2) consist of one of the above mentioned instruments Type ... /2212 and a typetested Type 2231 Control Thermostat, for example:
Type 2114/2231/2212 · With Type 2114 Valve, Type 2231 Control Thermostat and Type 2212 Safety Thermostat.

Special versions

Optionally with an electric signal transmitter (7) for fault indication and/or an electromagnetic release device (6) with a solenoid for connection to a safety interlock circuit (Fig. 5) or with a Type 2401 Pressure Element for limits from 1 to 10 bar.

Temperature regulators, safety temperature limiters and **pressure limiters (TR/STL/PL)** acc. to Fig. 4 consist of one of the above mentioned devices and a Type 2401 Pressure Limiter.

The Type 2231 Control Thermostat can be replaced by a typetested Type 2232 to Type 2235 Control Thermostat.

Details and technical data can be found in the Data Sheets:
Data Sheet T 2111 EN - With Type 2111 Globe Valve
Data Sheet T 2121 EN - With Type 2114 Globe Valve
Data Sheet T 2131 EN - With Type 2118 Three-way Valve
Data Sheet T 2133 EN - With Type 2119 Three-way Valve

[1] DN 15 to DN 25: Unbalanced

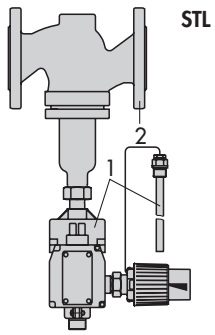

Fig. 1 · Type 2111/2212 or Type 2114/2212 Safety Temperature Limiter (STL)

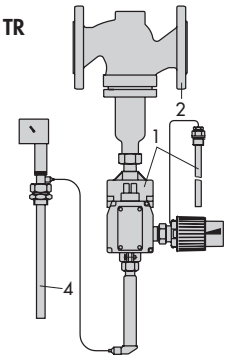

Fig. 2 · Type 2111/2231/2212 or Type 2114/2231/2212 Temperature Regulator (TR) and Safety Temperature Limiter (STL)

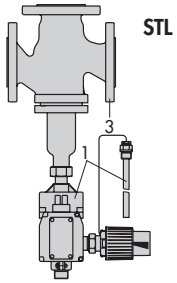

Fig. 3 · Type 2118/2212 or Type 2119/2212 Safety Temperature Limiter (STL)

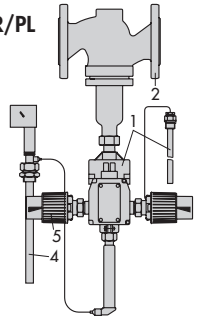

Fig. 4 · Type 2111/2231/2212/2401 or Type 2114/2231/2212/2401 Temperature Regulator, Safety Temperature Limiter and Pressure Limiter (TR/STL/PL)

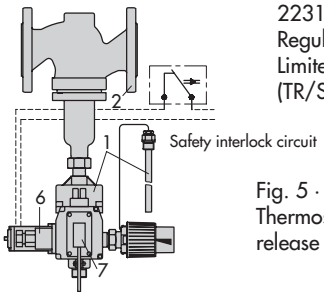

Fig. 5 · Type 2212 Safety Thermostat with electromagnetic release device (6) in a safety

1 Type 2212 Safety Thermostat
2 Globe valve (Type 2111 or Type 2114)
3 Three-way valve (Type 2118 or Type 2119)
4 Type 2231 Control Thermostat
5 Type 2401 Pressure Limiter
6 Electromagnetic release device
7 Electric signal transmitter

Principle of operation (Fig. 6)

The safety temperature limiters (STL) are equipped with a temperature sensor which operates according to the adsorption principle.

The medium temperature produces a pressure in the sensor (9) that corresponds to the actual temperature. This pressure is transmitted through the capillary tube (10) to a positioning bellows, converted into a positioning force and compared with the force of a positioning spring.

The spring force is adjusted at the limit value adjuster (11). If the actual temperature exceeds the adjusted limit, the spring mechanism in the operating element (8) releases and moves the pin (6) as well as the plug stem (5). The spring mechanism closes and locks the valve.

The valve can only be unlocked and put back into operation with a special tool, after the temperature has fallen below the limit value and the fault has been removed.

Installation

- **Valve**

The valves are to be installed in horizontal pipelines. The direction of medium flow through the valve must match the arrow on the body. The operating element of the thermostat must be suspended downwards.

- **Capillary tube**

The capillary tube must be laid in such a way that it is not exposed to large temperature fluctuations and cannot be damaged. The ambient temperature should not exceed the permissible limits. The smallest permissible bending radius is 50 mm.

- **Temperature sensor**

The temperature sensor may be installed in any desired position. Its whole length must be immersed in the medium to be controlled. It should be installed in a location where overheating or considerable idle times cannot occur.

Only the same kind of materials should be combined, for example thermowells of stainless steel 1.4571 can be installed into heat exchangers of stainless steel.

Special installation regulations according to VdTÜV

The valve may be only used with a strainer (e.g. Type 2NI acc. to Data Sheet T 1015 EN) installed upstream of the valve inlet.

Only use SAMSON thermowells.

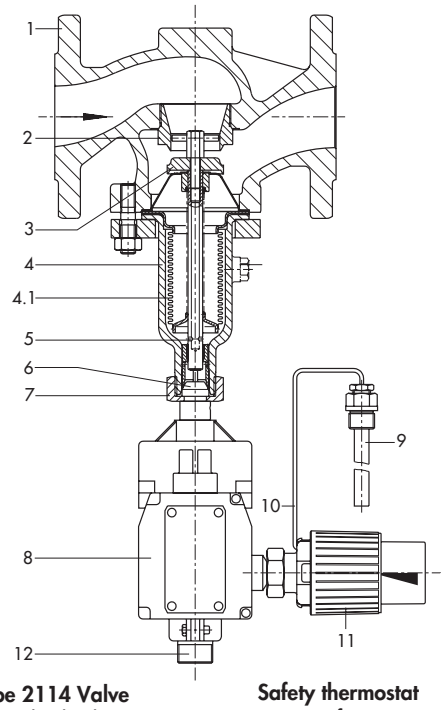

Type 2114 Valve
1 Valve body
2 Seat (exchangeable)
3 Plug
4 Bellows housing
4.1 Balancing bellows
5 Plug stem with spring

Safety thermostat
6 Pin of operating element
7 Coupling nut G 1
8 Operating element with spring element
9 Temperature sensor with thermowell
10 Capillary tube
11 Limit value adjuster (Type 2212)
12 Connection for control thermostat

Fig. 6 · Type 2114/2212 Safety Temperature Limiter (STL)

Accessories

- **Extension piece** to protect the operating element against excessive temperatures [1] (see specifications in associated data sheet)
- **Distance piece** made of brass or CrNi steel
- **Thermowell** made of CrNiMo steel

Special version

- An additional electromagnetic release device and/or electric signal transmitter for remote transmission of the plant state can be attached to the operating element (8).
- Special K_{VS} coefficient (reduced) for Type 2114/2212 or Type 2111/2212.
- With Type 2401 Pressure Limiter (PL)
- Capillary tube of either 10 or 15 m (not typetested).

Register numbers of devices tested acc. to DIN EN 14597

Test marks assigned in the typetest to the Type 2212 Safety Thermostat with Type 2111, Type 2114, Type 2118 and Type 2119 Valves and Type 2231, Type 2232, Type 2233, Type 2234 and Type 2235 Control Thermostats as well as Type 2401 Pressure Limiter are available on request.

[1] Type 2118: The use of an extension piece does not allow an increase in the maximum permissible temperature.

Table 1 · Technical data · All pressures in bar (gauge)

Valves												
Nominal size	**DN**	**15**	**20**	**25**	**32**	**40**	**50**	**65**	**80**	**100**	**125**	**150**
Type 2111	Further details on technical data of valves and control thermostats can be found in the data sheets listed.	See Data Sheet T 2111 EN						–				
Type 2114		See Data Sheet T 2121 EN										
Type 2118		See Data Sheet T 2131 EN						–				
Type 2119		See Data Sheet T 2133 EN										
Nominal pressure		PN 16 to PN 40										

Type 2212 Safety Thermostat for **STM**	Size 50	Size 150
Adjustable range of limit value	10 to 90 °C · 20 to 120 °C · 30 to 170 °C	
Permissible ambient temperature with electromagnetic release device	–20 to +80 °C –20 to +60 °C	
Permissible temperature at sensor	Max. 20 K above adjusted set point	
Capillary tube length	5 m (special version 10 m or 15 m) [1]	
Permissible pressure at sensor with thermowell G ½	PN 40	
Electromagnetic release device	Power supply: 230 V~ +5/–10 %, 50 Hz	
Degree of protection	IP 54	
Power consumption	31 VA (100 % ED)	
Electric signal transmitter	Permissible load: 230 V~, 10 A at ohmic load	

[1] Not typetested

Table 2 · Materials · Material numbers according to DIN EN

Type 2213 Safety Thermostat for **STM**				
		Standard version	**Special version**	
Operating element		GD AlSi 12 (230) · Connection piece 1.4104	–	
Sensor		Only with thermowell and conducting sheet		
Thermowell		Copper SF-Cu F20	Stainless steel 1.4571	
Capillary tube		Copper SF-Cu F20	–	
G 1	Immersion tube	Nickel-plated bronze	Nickel-plated copper	Stainless steel 1.4571
	Threaded nipple	Nickel-plated brass		

Ordering text

Safety Temperature Limiter Type .../2212
Nominal pressure PN ..., nominal size DN
K_{vs} coefficient ..., body material ...

With **Type 2212** Safety Thermostat
limit value range ... °C
limit value adjusted ... °C (normal 90 or 110 °C)
Optional accessories ...
Optional special version ...

Temperature Regulator with Safety Temperature Limiter Type .../2231/2212
Nominal pressure PN ..., nominal size DN ...,
K_{vs} coefficient ...,
body material …
With Type 2231 Thermostat, capillary tube ... m,
set point range ...°C
and
Type 2212 Safety Thermostat, capillary tube ... m,
limit value range ... °C
limit value adjusted ... °C (normal 90 or 110 °C)
Optional accessories …
Optional special version ...

Table 3 · Dimensions in mm and weights

Nominal size DN		15	20	25	32	40	50	15	20	25	65	80	100	125	150
		Type 2114			Type 2111 (2114)			Type 2111			Type 2114				
Length L		130	150	160	180	200	230	130	150	160	290	310	350	400	480
H1	Without extension piece	225			225 [3]/152 [4]/(225)			225 [3]/82 [4]			300		355	460	590
	With extension piece	365			365 [3]/– [4]/(365)			365 [3]/– [4]			440		495	600	730
Weight (body PN 16) [2]	Approx. kg	5	5.5	6.5	13	13.5	16	4	4.5	5.5	27	32	40	70	113
		Type 21149			Type 2118/2119			Type 2118			Type 2119				
Length L		130	150	160	180	200	230	130	150	160	290	310	350	400	480
H2		70	80	85	100	105	120	70	80	85	130	140	150	200	210
H1	Without extension piece [1]	235			88/245			78			320		355	395	500
	With extension piece [1]	375			–/385			–			460		495	535	640
Weight (body PN 16) [2]	Approx. kg	6	7	8.5	12.5/15	14.5/17	17/19	5	6.5	8	32	50	71	On request	
H1	Without extension piece	H = H1 + 255													
	With extension piece	H = H1 + 545													
Type 2212 Safety Thermostat															
Weight, approx. in kg		3.5													

[1] Type 2118: The use of an extension piece does not allow an increase in the maximum permissible temperature.
[2] +15 % for PN 25/PN 40
[3] Type 2111: valve material 1.0619 and stainless steel
[4] Type 2111: valve material EN-JS 1049 and EN-JL 1040 (GG-25)

Dimensions

Safety Temperature Limiters with Type 2212 Safety Thermostat

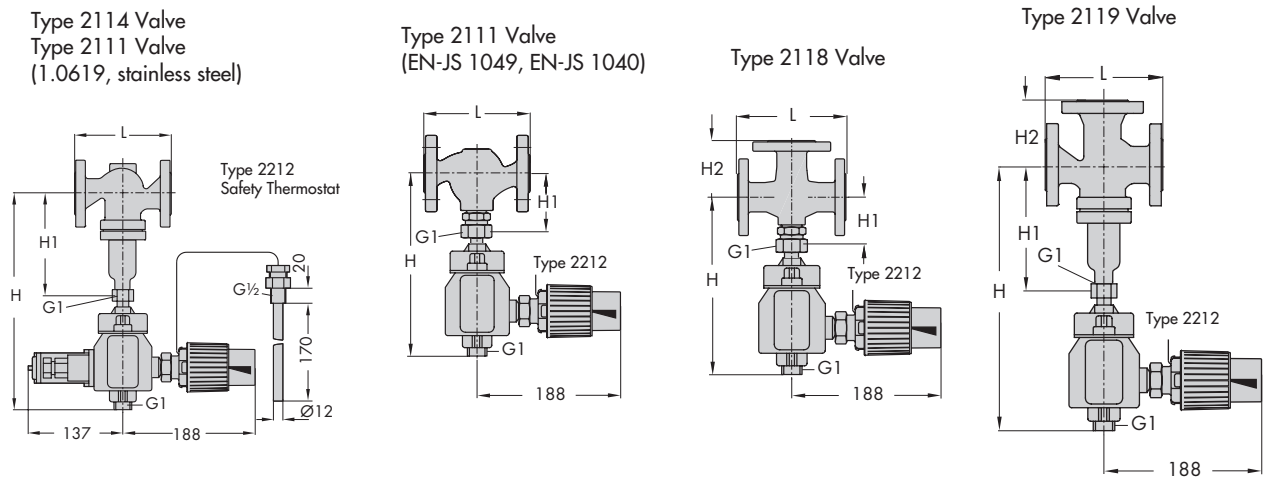

Fig. 7 · Dimensions

Circuit diagrams

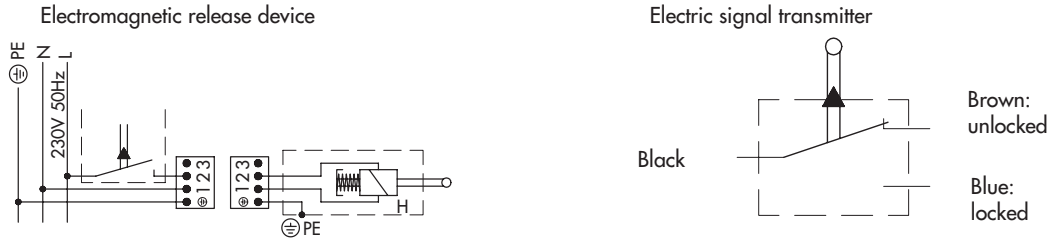

Fig. 8 · Circuit diagrams

Specifications subject to change without notice.

SAMSON AG · MESS- UND REGELTECHNIK
Weismüllerstraße 3 · 60314 Frankfurt am Main · Germany
Phone: +49 69 4009-0 · Fax: +49 69 4009-1507
Internet: http://www.samson.de