Self-operated Pressure Regulators Series 44

Pressure Reducing Valve Type 44-9

Safety Shut-off Valve (SSV) with integrated pressure reducing valve, TÜV-typetested for water

Application

Pressure regulators for set points from **2** to **10.5 bar** · Valves sizes **DN 15** to **DN 50** · **PN 25** · Suitable for liquids up to **150 °C** and non-flammable gases up to **80 °C** · Safety shut-off valve (SSV) for protecting district heating plants

The valve **closes** when the **downstream** pressure rises

The Type 44-9 Safety Shut-off Valve with integrated pressure reducing valve controls the pressure downstream of the valve, especially in district heating plants and large heating systems. They block the heat flow when a set point is reached. The valve closes when the downstream pressure rises and opens again when this pressure drops.

In the event of a ruptured operating diaphragm, for example, due to excess inlet pressure, the second diaphragm comes into operation and closes the valve.

The regulators therefore comply with AGFW (German District Heating Association) regulations concerning components in house substations.

Special features

- Suitable for water and other liquids, provided they do not cause the materials used to corrode
- Single-seated valve with balanced plug
- Actuator with two diaphragms
- Special version for oil
- Restricted flow cross-section with smaller K_{VS} (special version in DN 15)

Versions (Figs. 2 and 3)

Series 44 Pressure Regulators for set point ranges from 2 to 10.5 bar · Valves in nominal sizes DN 15 to DN 50 · With welding ends (special version with threaded ends or flanges) · DN 32, 40 and 50 versions also available with flanged valve body

Special version

– Special K_{VS} for DN 15
– With oil-resistant internal parts
– ANSI version available on request

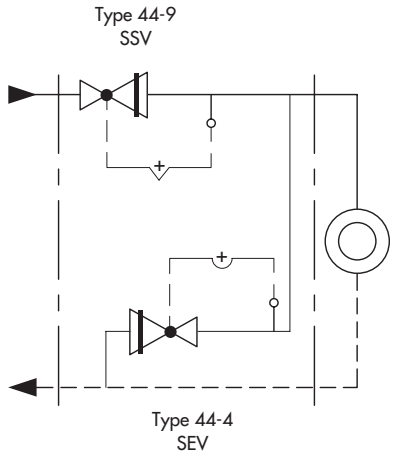

Fig. 1 · Protection of a house substation with SSV and SEV

Fig. 2 · Type 44-9 Safety Shut-off Valve (SSV)

Associated Information Sheet	**T 2500 EN**	**Edition February 2009**	
Associated Data Sheet for accessories	**T 2595 EN**	**Data Sheet**	**T 2630 EN**

Principle of operation

The medium flows through the valve (1) in the direction indicated by the arrow. The position of the valve plug determines the flow rate across the free area between plug (3) and seat (2).

The downstream pressure p_2 to be controlled is transmitted over the externally routed control line (11) to the operating diaphragm (6.1) where it is converted into a positioning force. This force moves the valve plug depending on the force of spring assembly (8) which can be adjusted at the set point adjuster (10).

The valve closes when the downstream pressure rises and opens again when this pressure drops.

The valve has a balanced plug (3). As a result, the forces generated by the upstream pressure which act on the valve plug are eliminated.

In the event that the operating diaphragm (6.1) ruptures, the safety diaphragm (6.2) closes the plug and blocks the flow.

To recognize a ruptured diaphragm, a diaphragm rupture indicator (12) is installed in the intermediate ring.

Typetesting

The Type 44-9 Safety Shut-off Valves for K_{VS} 2.5 and higher have been typetested for water by the German Technical Inspectorate, TÜV. The test mark is available on request.

Installation

The regulators are suitable for installation in horizontal pipelines. The following installation conditions must be kept:

- The direction of flow must correspond with the arrow on the valve body.
- The valve bonnet, including the body, must be vertically suspended.
- Install a strainer (e.g. SAMSON Type 1 NI) upstream of the valve, if possible.

Further details can be found in EB 2630 EN.

1	Valve body	6	Actuator
2	Seat (replaceable)	6.1	Operating diaphragm
3	Plug (balanced)	6.2	Safety diaphragm
4	Plug stem	7	Actuator stem
5	Plug spring	8	Spring assembly
		9	Spring plate
		10	Set point adjuster
		11	Control line
		12	Diaphragm rupture indicator

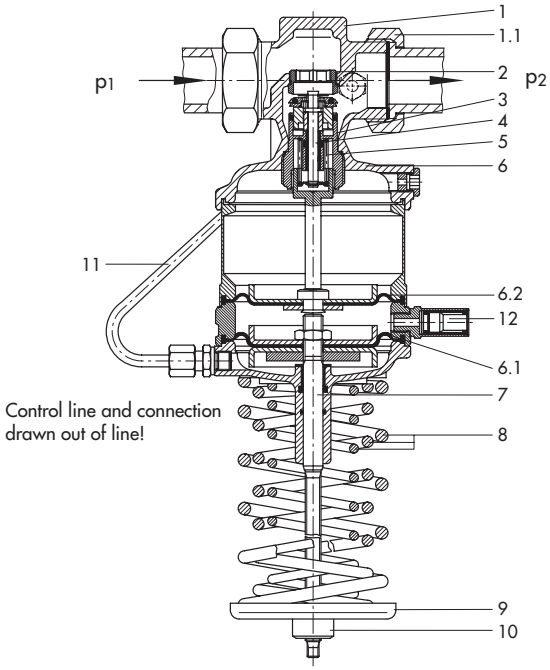

Type 44-9 SSV (DN 32) with threaded connections

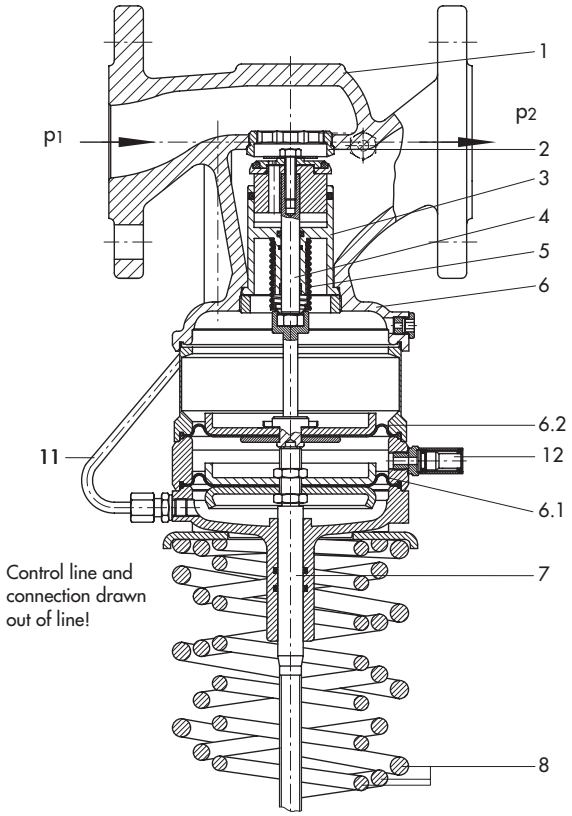

Type 44-9 SSV (DN 40) with flanged body

Fig. 3 · Sectional drawings

Table 1 · Technical data · All pressures in bar (gauge)

Nominal size DN		15	20	25	32	40	50
K_{VS}	Standard version	4	6.3	8	12.5	16	20
	Special versions	1 · 2.5	–	–	–	–	–
	Flanged body version	–	–	–	12.5	20	25
z value		0.6		0.55		0.5	0.45
Nominal pressure		PN 25					
Max. perm. differential pressure Δp		20 bar			12 bar		
Max. perm. temperature		150 °C					
Leakage rate		≤ 0.05 % of K_{VS}					
Set point ranges [1], continuously adjustable		2 to 4.2 bar · 2.4 to 6.3 bar · 6 to 10.5 bar					

[1] Special set point ranges, without typetesting, on request

Table 2 · Materials · Material number acc. to DIN EN

Type 44-9 Pressure Regulator (SSV)	
Valve body	Red brass CC491K or CC499K · Spheroidal graphite iron EN-JS 1049 (GGG-40.3) [1]
Actuator casing/Intermediate ring	Red brass CC491K or CC499K
Seat	Stainless steel 1.4305
Plug	Brass 2.0402 (CuZn40Pb) and stainless steel 1.4305 with EPDM soft sealing [2]
Valve spring	Stainless steel 1.4310
Operating diaphragm	EPDM with fabric reinforcement [2]
Sealing rings	EPDM [2] (ethyl propylene diene methylene rubber)

[1] Additional version for DN 32, 40 and 50: Valve with flanged body made of spheroidal graphite iron

[2] Special version for oil (ASTM I, II, III): FPM (FKM)

Flow rate diagram for water

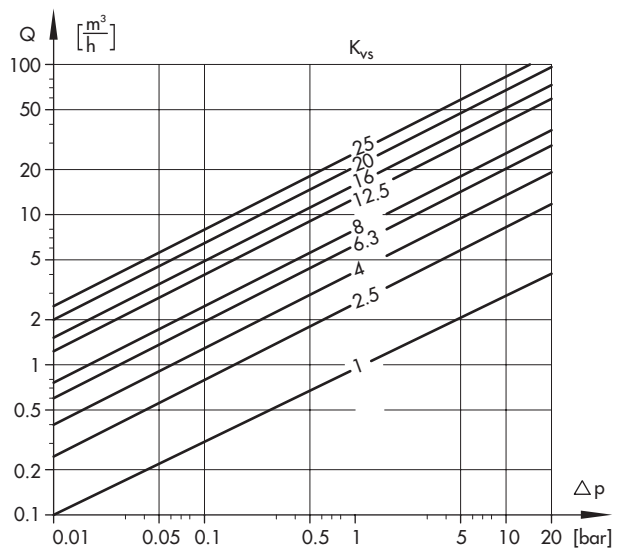

Fig. 4 · Flow rate diagram for water

Pressure-temperature diagram acc. to DIN EN 12516-1

The range of application, the permissible pressures and temperatures are limited by the specifications in the pressure-temperature diagram and the pressure ratings.

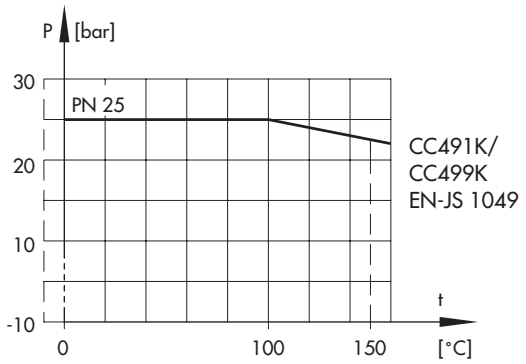

Fig. 5 · Pressure-temperature diagram

Dimensional diagrams

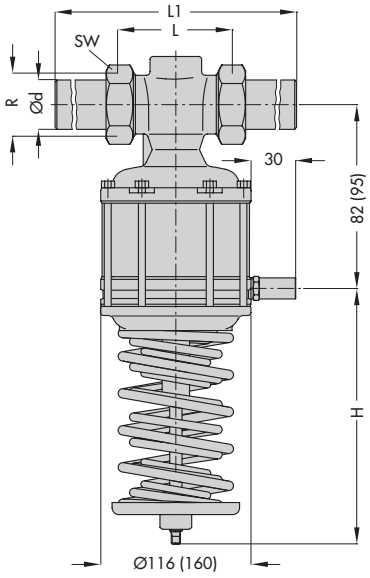

Version with connection nuts and welding ends, specifications in parentheses ( ) apply to DN 40 and DN 50

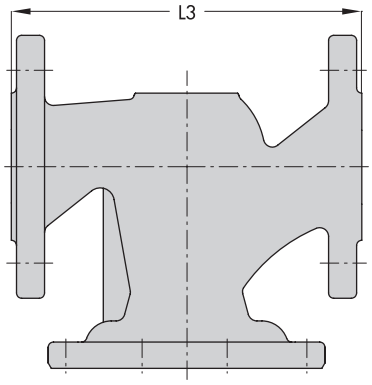

Version with flanged valve body for DN 32/40/50

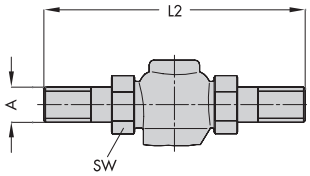

Version with connection nuts and threaded ends

Table 3 · Dimensions and weights · All dimensions in mm

Nominal size DN	**15**	**20**	**25**	**32**	**40**	**50**
Pipe ∅ d	21.3	26.8	32.7	42	48	60
Connection R	G ¾	G 1	G 1¼	G 1¾	G 2	G 2½
Width across flats SW	30	36	46	59	65	82
Length L	65	70	75	100	110	130
L1 with welding ends	210	234	244	268	294	330
Height H		235 [1]			393	
Weight, approx. in kg	2.0	2.1	2.2	3.5	9.0	9.5
Special versions						
With threaded ends (male thread)						
Length L2	129	144	159	180	196	228
Male thread A	G ½	G ¾	G 1	G 1¼	G 1½	G 2
Weight, approx. in kg	2.0	2.1	2.2	3.5	9.0	9.5
With screwed-on flanges [2] or with flanged body (DN 32 to 50)						
Length L3	130	150	160	180	200	230
Weight, with screwed-on flanges	3.4	4.1	4.7	7	13	14.5
approx. in kg with flanged body	–	–	–	6.5	11	12.5

[1] Set point range 6 to 11 bar: 273 mm

[2] Valves in DN 40 and DN 50 already have flanges mounted

Fig. 6 · Dimensions

Ordering text

Safety Shut-off Valve (SSV) Type 44-9 with pressure reducing valve

DN … with connection nuts and welding ends/threaded ends/flanges or
with flanged body in DN 32, 40 and 50 only
Set point range … bar,
Special version …

Specifications subject to change without notice.

SAMSON AG · MESS- UND REGELTECHNIK
Weismüllerstraße 3 · 60314 Frankfurt am Main · Germany
Phone: +49 69 4009-0 · Fax: +49 69 4009-1507
Internet: http://www.samson.de