Electric Control Valves/Controller with Electric Actuator
Types 3213/5757, 3213/5724, 3214/5724

Single-seated Globe Valve Type 3213, unbalanced
Single-seated Globe Valve Type 3214, balanced

Application

Globe valves mounted on controllers with electric actuators for heating, ventilation, and air-conditioning systems
DN 15 to DN 50 · **PN 16 to PN 40** · Versions **up to 150 °C** and **up to 220 °C**

The control valves consist of either a single-seated, unbalanced Type 3213 Globe Valve or a single-seated, balanced Type 3214 Globe Valve together with either a Type 5757 or Type 5724 Controller with Electric Actuator.

Special features

- Single-seated, unbalanced Type 3213 Globe Valve or a single-seated, balanced Type 3214 Globe Valve
- Type 3213 Valve available as special version for steam
- Force-locking connection between valve and actuator

Versions

– With **Type 3213 Globe Valve**, unbalanced

For DHW heating in instantaneous heating systems and mechanical engineering applications		
Type 3213/5757 · Fig. 1	PN 25	DN 15 to 25
Type 3213/5724 · Fig. 2	PN 25	DN 15 to 25
	PN 16	DN 32 to 50
Heating applications		
Type 3213/5757-7	PN 25	DN 15 to 25

– With **Type 3214 Globe Valve**, balanced

For DHW heating in instantaneous heating systems and mechanical engineering applications		
Type 3214/5724 · Fig. 3	PN 16 to 40	DN 15 to 50
Heating applications		
–	–	–

Also available:

– Type 3213 and Type 3214 Globe Valves with electric, electrohydraulic or pneumatic actuators (refer to T 5868 EN)

Typetested electric control valves:

– Type 3213 and Type 3214 Globe Valves mounted on controllers with electric actuators with safety function (refer to T 5769 EN)

– Type 3213 and Type 3214 Globe Valves mounted on electric actuators with safety function (refer to T 5869 EN)

Fig. 1 · Type 3213/5757

Fig. 2 · Type 3213/5724

Fig. 3 · Type 3214/5724

Associated Information Sheet **T 5700 EN**
Associated Data Sheets for controllers with electric actuators **T 5757-7 EN, T 5757 EN, T 5724 EN**

Edition February 2008

Data Sheet **T 5768 EN**

Principle of operation (Fig. 4)

The medium flows through the single-seated globe valve in the direction indicated by the arrow. The position of the valve plug determines the cross-sectional area of flow released between the plug (3) and seat (2).
Type 3214 Valves are pressure-balanced. In this case, the pressure upstream of the plug is transferred over a hole in the plug stem (6) to the outside of the balancing bellows, whereas the pressure downstream of the plug acts on the inside of the bellows. In this way, the forces created by these pressures acting on the valve plug are eliminated.
The electric actuator contains a digital controller integrated into the actuator. The controlled variable is measured over the directly connected Pt 1000 sensor. The output signal of the digital controller acts as a three-point stepping signal on the synchronous motor of the actuator and is transferred over the connected gear as a positioning force onto the actuator stem (8.2).

Refer to Data Sheet for details	
Type 5757-7	–> Data Sheet T 5757-7 EN
Type 5757	–> Data Sheet T 5757 EN
Type 5724	–> Data Sheet T 5724 EN

Installation

Install the valve in the pipeline with the actuator in the upright position.
Other mounting positions on request.

Terms for control valve sizing

acc. to DIN EN 60534, parts 2-1 and 2-2: $F_L = 0.95$; $x_T = 0.75$

Selection and sizing of the control valve

1. Calculate appropriate K_V coefficient according to DIN EN 60534.
2. Select valve size DN and K_{VS} coefficient from Table 2.
3. Check permissible differential pressure from Table 2.
4. Check permissible temperature and select valve version from Table 1.
5. Select suitable controller with electric actuator from Table 3 and from the technical data from the corresponding Data Sheet:
   Type 5757-7 –> Data Sheet T 5757-7 EN
   Type 5757 –> Data Sheet T 5757 EN
   Type 5724 –> Data Sheet T 5724 EN
6. Select materials, pressure and temperature from Tables 1 and 2, from the technical data of the controller with electric actuator as well as from the pressure-temperature diagram (Fig. 5).

Ordering text

Electric control valve/Controller with electric actuator (Type 5757-7, Type 5757, Type 5724)
– Type 3213/5757-7, 3213/5757, 3213/5724
– Type 3214/5724
DN ..., PN ..., K_{VS} ...,
max. differential pressure Δp ... bar, max. temperature ... °C, body material ...

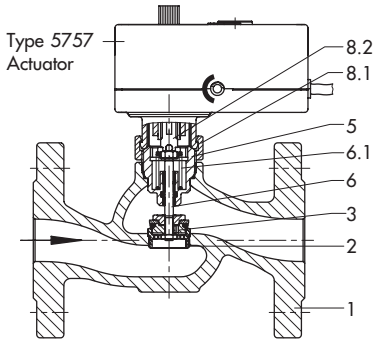

Type 3213/5757

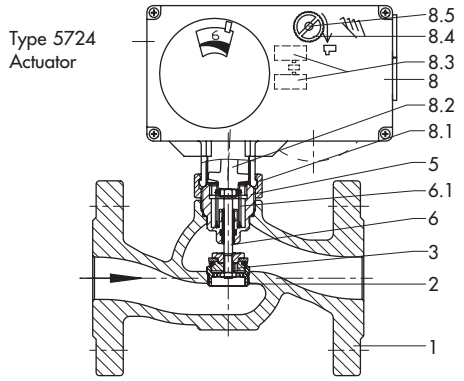

1	Valve body	8	Actuator
2	Seat	8.1	Coupling nut
3	Plug	8.2	Actuator stem
5	Adapter	8.3	Torque switch
6	Plug stem	8.4	Handwheel
6.1	Spring	8.5	Actuating shaft

Fig. 4 · Functional diagram of Type 3213/5757 (top) and Type 3213/5724 (bottom)

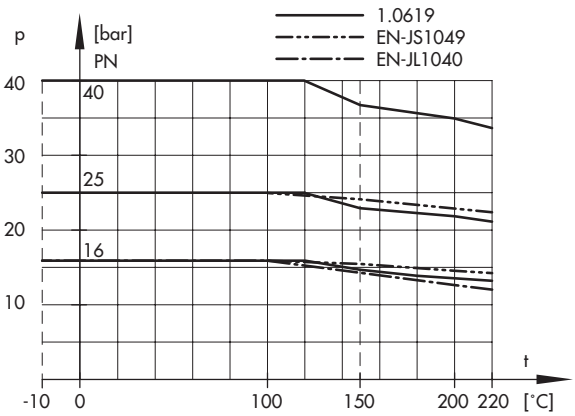

Fig. 5 · Pressure-temperature diagram

Table 1.1 · Technical data

Type 3213 Globe Valve							
Nominal size	DN	**15**	**20**	**25**	**32**	**40**	**50**
Nominal pressure		PN 25			PN 16		
Perm. temperature (upright)	°C	150			150		
Version for steam	°C	200			On request		
Rated travel	mm	6			12		
Rangeability		50 : 1					
Leakage class		Class I (< 0.05 % of K_{VS})					
Type 3214 Globe Valve							
Nominal size	DN	**15**	**20**	**25**	**32**	**40**	**50**
Nominal pressure		PN 16 to 40					
Perm. temperature (upright)	°C	150					
Version up to 220 °C	°C	220					
Rated travel	mm	6			12		
Rangeability		50 : 1					
Leakage class		Class I (< 0.05 % of K_{VS})					

Table 1.2 · Materials · Material number acc. to DIN EN

Type 3213 Globe Valve			
Nominal pressure	**PN 16**	**PN 25**	**PN 40**
Valve body	EN-JL1040 (GG-25)	EN-JS1049 (GGG-40.3)	–
Seat	1.4305	1.4305	–
Plug	1.4305 with metal sealing	Brass with EPDM soft sealing or FPM (FKM) seal	–
Special version	–	K_{VS} = 0.1 to 2.5: 1.4305 with metal sealing	–
Plug stem	1.4305		–
Spring	1.4310		–
Guide nipple	Brass with EPDM seal or FPM (FKM) seal		–
Insulating section (version for steam)	1.4571		–
Type 3214 Globe Valve			
Nominal pressure	**PN 16**	**PN 25**	**PN 40**
Valve body	EN-JL1040 (GG-25)	EN-JS1049 (GGG-40.3) or 1.0619 (GS-C 25)	1.0619 (GS-C 25)
Special version	EN-JS1049 or 1.0619	–	–
Seat and plug	CrNi steel · Special version with EPDM soft sealing		
Plug stem	1.4301		
Spring	–		
Bellows housing	1.0425		
Balancing bellows	1.4571		
Guide nipple	Brass with EPDM seal or FPM (FKM) seal		
Insulating section for version above 220 °C	1.4305 with EPDM seal or FPM (FKM) seal		

Table 2 · Overview: Nominal sizes, K_{VS} coefficients and maximum differential pressures

Type 3213 Globe Valve							
Nominal size DN	**15**		**20**	**25**	**32**	**40**	**50**
Rated travel mm	6				12		
K_{VS}	4		6.3	8	16	20	32
Maximum differential pressure in bar							
Type 5724	10		10	10	2.9	2.9	1.6
Type 5757	5		5	5	–		
Special version							
K_{VS}	0.1 · 0.16 · 0.25 · 0.4 · 0.63 · 1.0 · 1.6	2.5	2.5	–			40
Maximum differential pressure in bar							
Type 5724	20	10	10	–	–	–	1
Type 5757	20	5	5	5	–	–	–
Type 3214 Globe Valve							
Nominal size DN	**15**		**20**	**25**	**32**	**40**	**50**
Rated travel mm	6				12		
K_{VS}	4		6.3	8	16	20	32
Reduced K_{VS}	2.5		2.5 · 4	2.5 · 4 · 6.3	8	8 · 16	8 · 16 · 20
Max. diff. pressure bar	25						

Table 3 · Possible combinations for Type 3213 and Type 3214 Globe Valves/controllers with electric actuators

Type	**Refer to Data Sheet for details**	**Nominal size DN**					
		15	**20**	**25**	**32**	**40**	**50**
Type 3213 Globe Valve							
5757	T 5757 EN	•	•	•	–	–	–
5757-7	T 5757-7 EN	•	•	•	–	–	–
5724-10	T 5724 EN	•	•	•	–	–	–
5724-13		•	•	•	–	–	–
5724-20		–	–	–	•	•	•
5724-23		–	–	–	•	•	•
Type 3214 Globe Valve							
5724-10	T 5724 EN	•	•	•	–	–	–
5724-13		•	•	•	–	–	–
5724-20		–	–	–	•	•	•
5724-23		–	–	–	•	•	•

Table 4 · Dimensions and weights with actuator

Type 3213 Globe Valve/controller with electric actuator							
Nominal size	DN	**15**	**20**	**25**	**32**	**40**	**50**
Length L	mm	130	150	160	180	200	230
Height H1	mm	60	60	60	125	125	125
Height H	mm						
Type 3213/5757		150	150	150	–	–	–
Type 3213/5724		190	190	190	255	255	255
Weight [1]	approx. kg						
Type 3213/5757		3.0	3.6	4.0	–	–	–
Type 3213/5724		3.4	4.0	4.4	12.6	14.6	16.6
Type 3214 Globe Valve/controller with electric actuator							
Nominal size	DN	**15**	**20**	**25**	**32**	**40**	**50**
Length L	mm	130	150	160	180	200	230
Height H1	mm	235	235	235	235	235	235
Height H	mm	350	350	350	350	350	350
Height H2	mm	55	55	55	72	72	72
Weight [2]	approx. kg	7.6	7.8	8.8	15.3	15.8	18.3

[1] Version for steam: add 0.3 kg

[2] Version up to 220 °C: add 0.3 kg · Version for PN 25 and PN 40: +15 %

Dimensions in mm

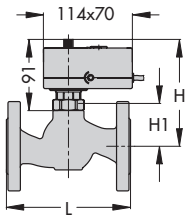

Type 3213/5757: DN 15 to 25
Type 3213/5757-7: DN 15 to 25

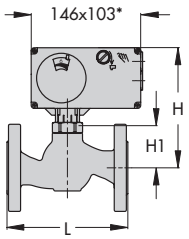

Type 3213/5724-xx: DN 15 to 50

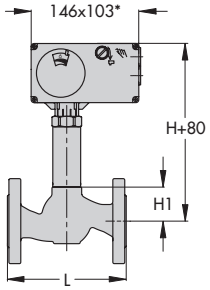

Version for steam
Type 3213/5724-xx: DN 15 to 50

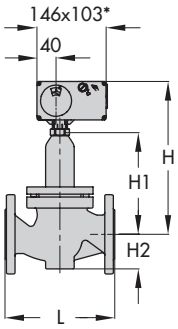

Type 3214/5724-xx: DN 15 to 50

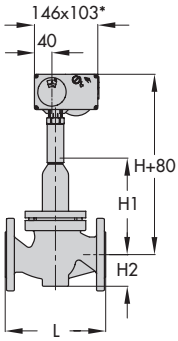

Version up to 220 °C
Type 3214/5724-xx: DN 15 to 50

* **Dimensions for Type 5724-x3 Actuators:**
146 x 136

Specification subject to change without notice.

SAMSON AG · MESS- UND REGELTECHNIK
Weismüllerstraße 3 · 60314 Frankfurt am Main · Germany
Phone: +49 69 4009-0 · Fax: +49 69 4009-1507
Internet: http://www.samson.de